JTL150F10

使用手册

USER MANUAL

CONTENTS

1.CHARACTERISTICS **6**

1.1、COMPLETE CRANE 6

1.2、TOWER 7

1.3、LOAD DIAGRAMS ..... 错误！未定义书签。

1.4、MECHANISMS ..... 错误！未定义书签。

2.PREPARING THE SITE **10**

2.1、SUMMARY 10

2.1.1、INTRODUCTION *10*

2.1.2、CHECKING THE GROUND CONSISTENCY *10*

2.1.3、CHECKING THE CRANE INSTALLATION AREA *12*

2.1.4、INTERFERING CRANES *14*

2.1.5、ELECTRIC POWER SUPPLY *15*

2.1.6、CALIBRATING WEIGHTS *21*

2.1.7、ANCHORAGES TO THE BUILDING *22*

2.2、COUNTERWEIGHTS 32

2.2.1、PREPARATION *32*

2.2.2、TYPE AND QUANTITY *32*

2.2.3、WORKING DRAWINGS *33*

2.3、ERECTION TRAVELING CRANE 35

2.3.1、CHASSIS *35*

2.3.2、FIXING THE BOGIES *37*

2.3.3、BASE BALLAST *47*

2.3.4、ASSEMBLING AND BALLASTING THE TRAVELLING CHASSIS *50*

2.4 ERECTION STATIONARY CRANE 61

2.4.1、LOADS ON THE GROUND *61*

2.4.2、INSTALLATION *68*

3.ERECTION **79**

3.1、ERECTION SEQUENCES 79

3.1.1、INTRODUCTION.....79

3.1.2、GENERAL INSTRUCTIONS FOR ERECTION.....80

3.2、MOUNTING THE BASIC MAST.....81

3.2.1、DESCRIPTION-WEIGHTS.....81

3.2.2、PREPARING THE BASIC MAST ON THE GROUND.....82

3.2.3、FITTING THE BASIC MAST.....84

3.3、SLEWING RING INSTALLTION.....85

3.3.1、SLEWING RING COMPONENTS.....85

3.3.2、SLEWING RING SPARE PARTS.....88

3.3.3、OVERHEAD ASSEMBLY OF THE SLEWING UNIT.....93

3.4、THE COUNTERJIB.....95

3.4.1、THE COUNTERJIB COMPONENTS.....95

3.4.2、THE COUNTERJIB SPARE PARTS.....98

3.4.3、OVERHEAD ASSEMBLY OF THE COUNTERJIB.....103

3.5、THE A-FRAME.....106

3.5.1、THE A-FRAME COMPONENTS.....106

3.5.2、THE A-FRAME SPARE PARTS.....108

3.5.3、A-FRAME OVERHEAD ASSEMBLY.....121

3.5.4、ASSEMBLY OF COUNTERWEIGHT A（5000kg）.....123

3.6、THE JIB、TIE-BAR AND HOOK INSTALLATION.....124

3.6.1、THE JIB、TIE-BAR AND HOOK COMPONENTS.....124

3.6.2、THE JIB、TIE-BAR AND HOOK SPARE PARTS.....127

3.6.3、OVERHEAD ASSEMBLY OF THE JIB 、TIE-BAR AND HOOK.....149

3.6.4、COUNTERWEIGHTS ASSEMBLY.....157

3.7、ROPE REEVING PATH.....157

3.7.1、LUFFING ROPE REEVING PATH.....157

3.7.2、HOISTING ROPE REEVING PATH.....163

3.7.3、HOISTING ROPE "X"-PART LINE REEVING PATH.....164

3.8 MAST COMPOSITION.....165

3.8.1 MAST COMPOSITION.....165

3.8.2 ASSEMBLING THE MAST PANELS *166*

3.9 FITTING THE ACCESSES 168

3.9.1 INTRODUCTI0N *168*

3.9.2 FITTING THE ACCESSES *168*

3.9.3 FITTING THE ACCESSES *171*

3.10 PREPARING THE TELESCOPING 175

3.10.2 BALANCING THE CRANE FOR TELESCOPING *183*

3.10.3 TELESCOPING *186*

3.11 PREPARING BEFORE PUTTING INTO SERVICE 193

3.11.1 CHECKS TO BE CARRIED OUT AFTER ERECTIION *193*

3.11.2 FOLDING DOWN THE MONORAILS *196*

3.11.3 LOWERING THE TELESCOPIC CAGE *197*

3.11.4 FITTING THE ELECTRIC SUPPLY CABLE *199*

3.11.5 SAFETY DEVICE *200*

4 .DISMANTLING BY MEANS OF THE MOBILE CRANE 209

4.1 REQUIREMENTS FOR DISMANTLING 209

4.2 DISMANTLING OF THE SLEWING UNIT 211

4.3 GROUND DISASSEMBLY OF THE JIB 212

4.4 DISMANTLING THE COUNTERJIB A-FRAME 213

4.5 GROUND DISASSEMBLY OF THE COUNTERJIB 213

4.6 SLEWING UPPER PART STORAGE 213

4.7 DISMANTLING THE BASIC MAST AND TELESCOPIC CAGE ASSEMBLY 213

4.8 DISMANTLING THE CHASSIS 213

5 .TOWER CRANEINNER-CLIMBING TYPE OPERATION 214

1.CHARACTERISTICS

1.1、COMPLETE CRANE

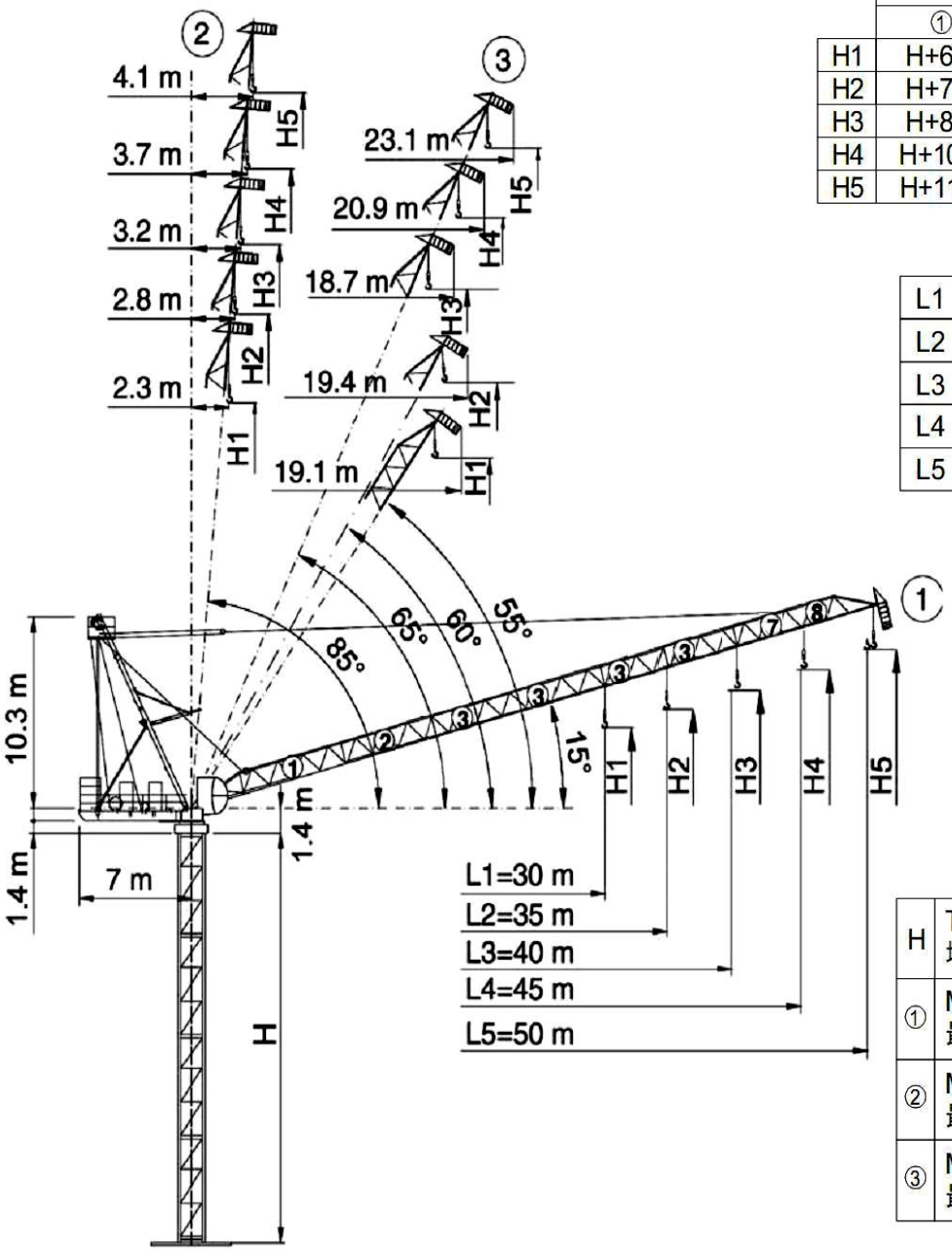

	H		
	①	②	③
H1	H+6.1	H+27.3	H+21.7
H2	H+7.5	H+32.5	H+27.7
H3	H+8.8	H+37.7	H+33.9
H4	H+10.1	H+42.8	H+38.5
H5	H+11.5	H+48	H+43.2

L1	30m=1+2+3+8
L2	35m=1+2+3+3+8
L3	40m=1+2+3+3+3+8
L4	45m=1+2+3+3+3+7+8
L5	50m=1+2+3+3+3+3+7+8

H	Tower height 塔身高度
①	Maximum jib 最大臂长
②	Minimum jib(in service) 最小臂长（工作状态）
③	Minimum jib(out of service) 最小臂长（非工作状态）

1.2、TOWER

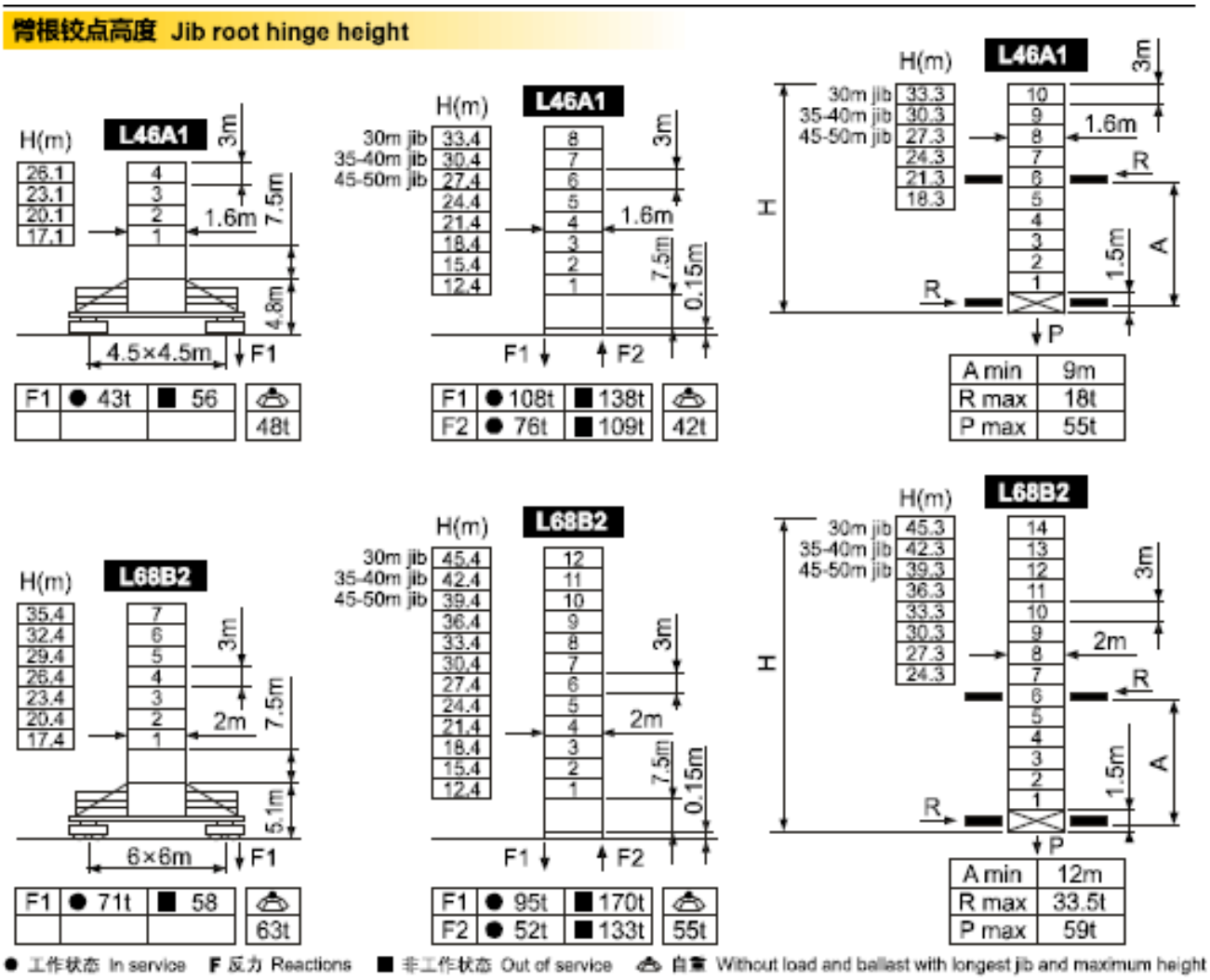
臂根铰点高度 Jib root hinge height
L46A1
H(m)
26.1
23.1
20.1
17.1
4
3
2
1
3m
1.6m
7.5m
4.8m
4.5×4.5m
F1
F1 ● 43t ■ 56
48t
L46A1
H(m)
30m jib 33.4
35-40m jib 30.4
45-50m jib 27.4
24.4
21.4
18.4
15.4
12.4
8
7
6
5
4
3
2
1
3m
1.6m
7.5m
0.15m
F1
F2
F1 ● 108t ■ 138t
F2 ● 76t ■ 109t
42t
L46A1
H(m)
30m jib 33.3
35-40m jib 30.3
45-50m jib 27.3
24.3
21.3
18.3
10
9
8
7
6
5
4
3
2
1
3m
1.6m
R
H
1.5m
A
P
A min 9m
R max 18t
P max 55t
L68B2
H(m)
35.4
32.4
29.4
26.4
23.4
20.4
17.4
7
6
5
4
3
2
1
3m
2m
7.5m
5.1m
6×6m
F1
F1 ● 71t ■ 58
63t
L68B2
H(m)
30m jib 45.4
35-40m jib 42.4
45-50m jib 39.4
36.4
33.4
30.4
27.4
24.4
21.4
18.4
15.4
12.4
12
11
10
9
8
7
6
5
4
3
2
1
3m
2m
7.5m
0.15m
F1
F2
F1 ● 95t ■ 170t
F2 ● 52t ■ 133t
55t
L68B2
H(m)
30m jib 45.3
35-40m jib 42.3
45-50m jib 39.3
36.3
33.3
30.3
27.3
24.3
14
13
12
11
10
9
8
7
6
5
4
3
2
1
3m
2m
R
H
1.5m
A
P
A min 12m
R max 33.5t
P max 59t
● 工作状态 In service
F 反力 Reactions
■ 非工作状态 Out of service
自重 Without load and ballast with longest jib and maximum height

1.3、LOAD DIAGRAMS

				15m	20m	25m	30m	35m	40m	45m	50m
50m Jib	2-falls	5.0t → 4.1m - 28.4m	t	5.00	5.00	5.00	4.65	3.75	3.12	2.65	2.30
	3-falls	7.5t → 4.1m - 20.6m	t	7.50	7.50	5.90	4.65	3.75	3.12	2.65	2.30
	4-falls	10.0t → 4.1m - 16.0m	t	10.00	7.77	5.90	4.65	3.75	3.12	2.65	2.30

				15m	20m	25m	30m	35m	40m	45m	
45m Jib	2-falls	5.0t → 3.7m - 30.2m	t	5.00	5.00	5.00	5.00	4.10	3.41	2.90	※
	3-falls	7.5t → 3.7m - 22.0m	t	7.50	7.50	6.39	5.04	4.10	3.41	2.90	
	4-falls	10.0t → 3.7m -17.4m	t	10.00	8.47	6.39	5.04	4.10	3.41	2.90	

				15m	20m	25m	30m	35m	40m	
40m Jib	2-falls	5.0t → 3.2m -31.3m	t	5.00	5.00	5.00	5.00	4.36	3.70	※
	3-falls	7.5t → 3.2m - 22.5m	t	7.50	7.50	6.61	5.29	4.36	3.70	
	4-falls	10.0t → 3.2m -17.7m	t	10.00	8.67	6.61	5.29	4.36	3.70	

				15m	20m	25m	30m	35m	
35m Jib	2-falls	5.0t → 2.8m - 33.2m	t	5.00	5.00	5.00	5.00	4.70	※
	3-falls	7.5t → 2.8m - 23.2m	t	7.50	7.50	6.88	5.58	4.70	
	4-falls	10.0t → 2.8m -18.1m	t	10.00	8.91	6.88	5.58	4.70	

				15m	20m	25m	30m
30m Jib	2-falls	5.0t → 2.3m - 30m	t	5.00	5.00	5.00	5.00
	3-falls	7.5t → 2.3m - 23.8m	t	7.50	7.50	7.13	5.90
	4-falls	10.0t → 2.3m -18.3m	t	10.00	9.09	7.13	5.90

※ = +200KG (2-falls Jib45m、40m、35m)

1.4、MECHANISMS

机构 Mechanisms

							绕绳量 Rope length
起升 Hoisting	60LVF25	2 falls	m/min	0～42	0～76	45kW	610m >610m※
			t	5	2.5		
		3 falls	m/min	0～28	0～51		
			t	7.5	3.75		
		4 falls	m/min	0～21	0～38		
			t	10	5		

变幅 Trolleying	60VVF40	2.5m/min	45kW
回转 Slewing	RCV95	0～0.8r/min	2×95Nmn
行走 Traveling	RT324	0～25m/min	2×5.2kW
380V(±5%) 50Hz	115kVA		

※ 请联系我们 Please consult us △可选 Option

ISO 9001

2.PREPARING THE SITE

2.1、SUMMARY

2.1.1、INTRODUCTION

The responsability for the preparation of the crane job site rests entirely with the crane user. Any clearing, leveling, building up or reinforcing of the ground where the crane will be positioned and operated shall be carried out by him, as well as the verification of feasibility of the different crane installations proposed by the manufacturer.

2.1.2、CHECKING THE GROUND CONSISTENCY

The primary requirements to be met at the job site before the arrival of the crane are: concrete foundations, ground beneath the ballast placed under the undercarriage or rail tracks, depending on the crane configuration chosen.

The installation of such elements depends particularly on the type of ground and foundation on which these assemblies are to be placed, as well as on the crane own characteristics.

The Buyer therefore must carry out a careful inspection and analysis of the ground consistency on which the crane shall stand.

Attention: When close to diggings, slopes, banks, etc., keep such a safety margin as to grant a load distribution angle of 45°.

The safety distance depends also on the ground characteristics (water quantity, friction, etc.).

Should ground conditions be critical, provide against sinkings with a containment concrete wall.

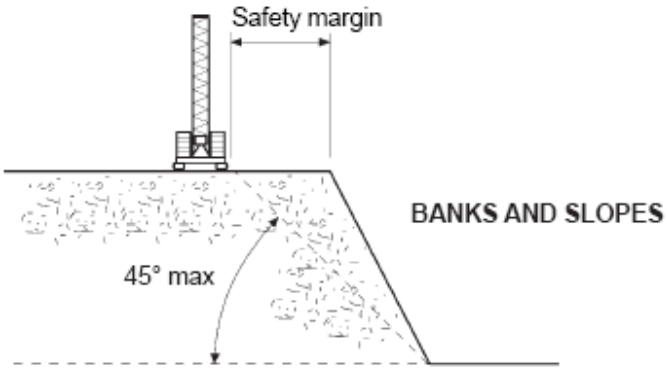
Safety margin
BANKS AND SLOPES
45° max

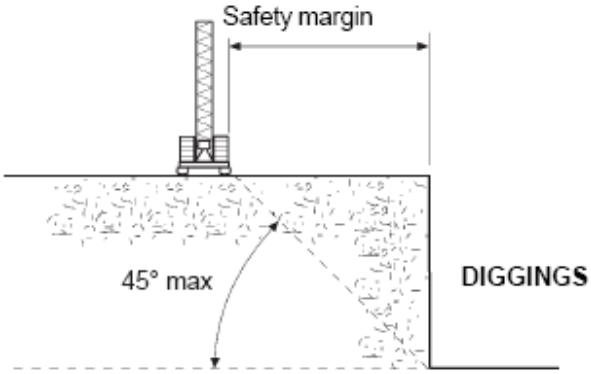
Safety margin
45° max
DIGGINGS

2.1.3、CHECKING THE CRANE INSTALLATION AREA

When choosing the location for the crane at the job site, the Client shall be particularly careful to ensure that the crane is not obstructed during its operational movements. Likewise he shall verify that, when the crane is out of service, its free slewing does not allow it to come in contact with existing buildings, buildings under construction, stored materials, scaffolding, adjacent cranes,machines, installations, cables, trees, etc.

Danger zone for cranes and loads operating near electric power lines

If the crane is working near electrical lines, precautionary measures shall be taken to prevent any crane part or the load from entering into the danger zone area shown in picture 1.3.2.

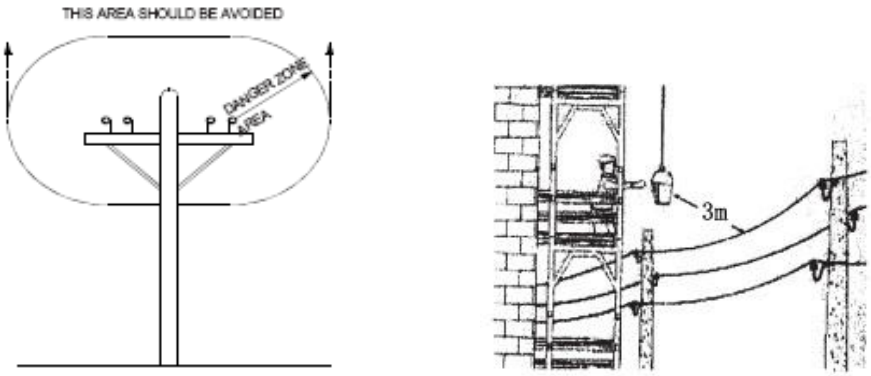

Picture 1.3.2

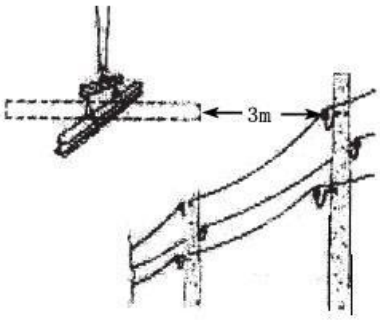

For lines rated 50 kV or below, minimum clearance between the lines and any part of the crane or load (including handling devices) shall be 3 m.

For higher voltages, see the Table.

REQUIRED CLEARANCE FROM HIGH VOLTAGE POWER LINES		
Normal Voltage [kV]		Minimum Clearance
		M
up to 50		3
from 50	to 200	4.6
from 200	to 350	6.1
from 350	to 500	7.6
from 500	to 750	10.6
from 750	to 1000	13.7

Caution shall be exercised when working near overhead lines because they can move horizontally or vertically due to wind, moving the danger zone shown in picture 1.3.2 to new positions.

A qualified signalperson shall be assigned to observe the clearance when the crane moves to within a jib's length of the table 1.3.1 limits. Actually the crane operator is not in the best position to judge distance between the power line and the crane or its protuberances.

When a crane is installed in proximity to power lines, durable signs shall be installed at the operator's station and on the base of the crane, warning that electrocution or serious bodily injury may occur.

Anyhow, before the commencement of operations near electrical lines, the person responsible for the job shall notify the owners of the lines or their authorized representatives, providing them with all pertinent information and requesting their cooperation to determine the proper safety distance according to the line power.

2.1.4、INTERFERING CRANES

When two or more cranes working at close range in the same job site can interfere with each other,the following precautions shall be taken:

A) Jibs shall be offset to avoid collision of any structural parts considering the maximum oscillation amplitude and a reasonable safety distance;

B) The minimum distance between the two cranes shall be great enough to prevent the cables and loads of the higher crane from interfering with the lower crane;

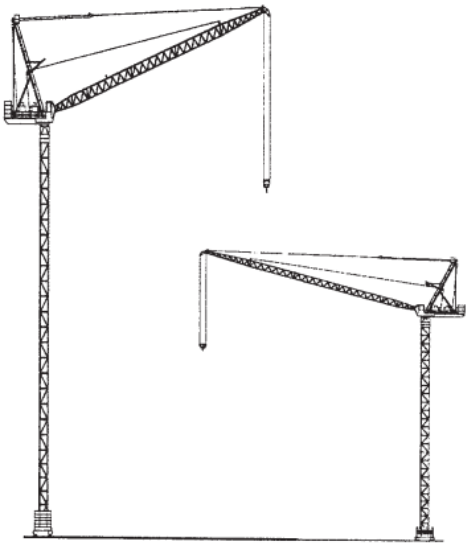

C) Electrical or radar anti-collision devices can be installed to limit the crane working range.

Always consult the Manufacturer for the installation of these safety devices.。

D）Remember that cranes must be always offset in height to avoid any interference when out of service.

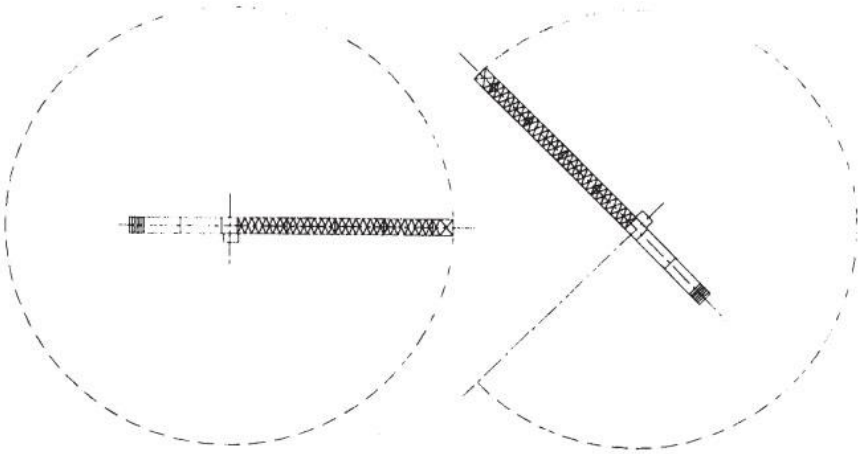

2.1.5、ELECTRIC POWER SUPPLY

2.1.5.1、Introduction

The connection of the crane to the electric energy source is upon the User.

For a correct operation of the crane, the installation should meet precise safety and size requirements.

To the purpose, some useful information are given for the best layout and realization of the electric connection.

The crane supply is three-phase type with protective bonding circuit, without neutral wire.

In the pages inside you will find:

The total electric power requirement “Pt” (expressed in kVA);

The rated power of the hoist winch “Pa” (expressed in kW or HP);

2.1.5.2、The power line

2.1.5.2.1、Mains supply rated voltage values

50 Hz Mains supply

The cranes are designed to work with 50 Hz supply and nominal voltage “Vn” 380V±5%.

It means that, with the crane ON and no movement in progress, the voltage value shall not exceed 400V while, with the crane in service and total power rating absorbed, voltage value, even for short time periods, shall not be less than 360V.

60 Hz Mains supply

The cranes are designed to work with 60 Hz supply and nominal voltage

“Vn” 440V±10%.

It means that, with the crane ON and no movement in progress, the voltage value shall not exceed 480V while, with the crane in service and total power rating absorbed, voltage value, even for short time periods, shall not be less than 400V.

2.1.5.2.2、Choosing the autotransformer

If the supply source cannot satisfy the rated mains voltage, it is necessary to install an autotransformer of proper characteristics to increase or reduce it. These vary according to the total power rating required and to the voltage terminals.

2.1.5.2.3、Crane transfer to different job sites

During the final inspection performed at the workshop, the crane is set to work in conformity with the supply mains in force in the destination country.

Should the machine be transferred to another country with different mains supply, adjust the transformer voltage terminals inside the electrical boxes on the rotating upper part of the crane accordingly.

2.1.5.2.4、Supply cables size

On establishing the supply voltage value, determine the cross-sectional area of the cable connecting the power source to “QEL” electrical box (with supply disconnecting device) on the base mast

section of the crane or on the undercarriage, if supplied：

The minimum cross-sectional area of the cable depends on “In” nominal current of the crane[to be calculated by the formula ln=pt（Vn $\sqrt{3}$ ）], on the cable type, on the installation type and on the temperature that the cable itself can withstand (see standards in force).

When using, instead,the multicore cables in an ambient air temperature of 25 °C, attain strictly to the values shown in table 1.5.2. Refer to “Pt” value and round it up, as necessary.

Table1.5.2

Total Power Rating "Pt" [kVA]	Current [A	Minimum Cross-sectional Area [mm2]
100	144	50
110	159	50
120	173	70
130	188	70
140	202	70
150	217	95
160	231	95
170	245	95
180	260	120
190	274	120
200	289	120
210	303	120
220	318	120
230	332	150
240	346	185
250	361	185
260	375	185
270	390	185
280	404	240
290	419	240
300	433	240

On establishing the minimum cross-sectional area of the cable, make sure that voltage drop “dV” falls within the designed limits.

For the calculation, refer to “Id” maximum peak current value, which varies according to thecrane model and to the hoist winch it is equipped with.

The voltage drop depends on the current and on the cross-sectional area and length ofthe cable.

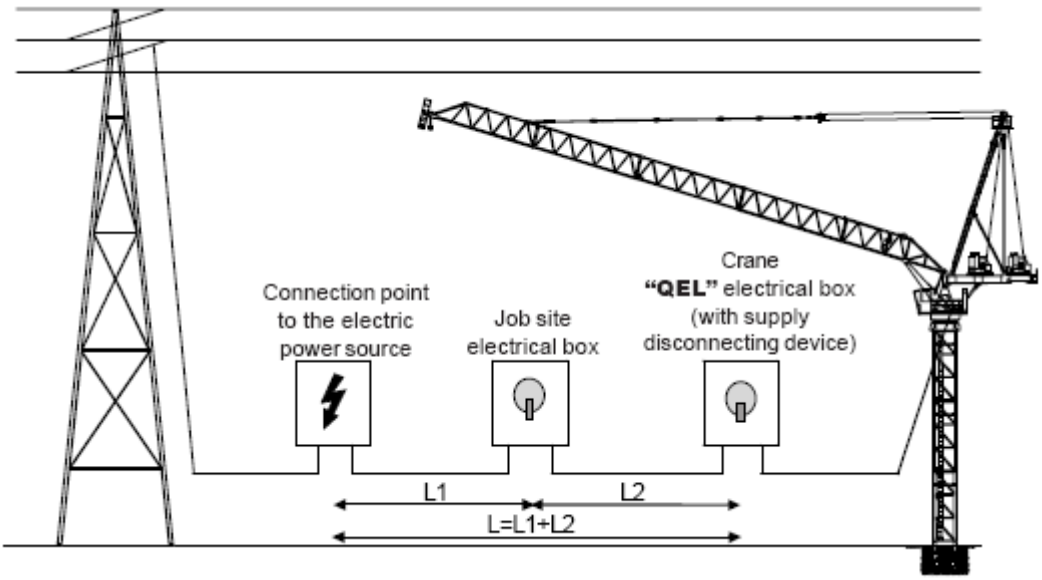

“L” =line cable length

“Vs” =nominal voltage under full load at theconnection point to the electric power source

“Vn” =nominal voltage of the crane (380 or 440V)

“ld” =maximum peak current

“dV” =maximum allowable voltage drop,to be calculated by the formula :

dv=Vs-(Vn-10%Vn)

On establishing “dV” maximum allowable voltage drop value, calculate “dVu” unitary voltage drop factor by the formula:

dVu=(dv×1000)：（L×ld）

On establishing “dVu” unitary voltage drop factor, choose the cross-sectional area of the cable as per table, approximating the value by defect.

Cross-sectional area 【mm2】	“dVu”
50	0.77
70	0.57
95	0.46
120	0.35
150	0.3
185	0.257
240	0.21
300	0.18
400	0.15

If the cross-sectional area proves to be lower than the minimum one already calculated, always choose the highest value.

If the crane is rather high, consider a fair margin, or make the calculation include a line length value equal to the crane own height.

2.1.5.3、Electric protections

Thermal protection

Assuming the cable has been chosen basing on those directions previously given and it energizes the crane exclusively, no thermal insulation is needed. It should be, anyhow, equal to “In” value.

Magnetic protection

The magnetic protection factor depends on the maximum current value that the supply cable can withstand when suffering the effects of a short circuit and shall conform to the standards in force.It shall be, anyhow, 10 times “In” value (if fuse “aM” type and automatic switch - D curve).

Protection against direct contacts

The crane does not need to be protected against direct contacts, since all electric components are insulated with IP23 minimum degree of protection and the cables are all double-insulation type.

An earth fault/residual current protection can be used to reduce damage to equipment due to earth fault currents.

The setting of the devices shall be as low as possible consistent with correct operation of the equipment” (setting should not be less than 500 mA).

2.1.5.4、Grounding

2.1.5.4.1、Grounding the electric equipment

The crane equipment grounding depends on the current distribution system chosen.

The most common systems are:

a) TT electric network

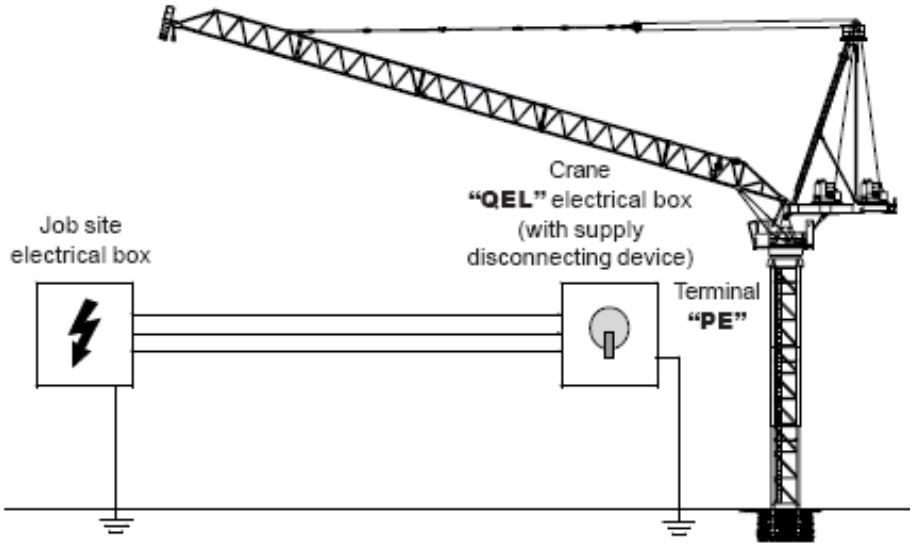
Job site
electrical box
Crane
"QEL" electrical box
(with supply
disconnecting device)
Terminal
"PE"

b) TN-S electric network

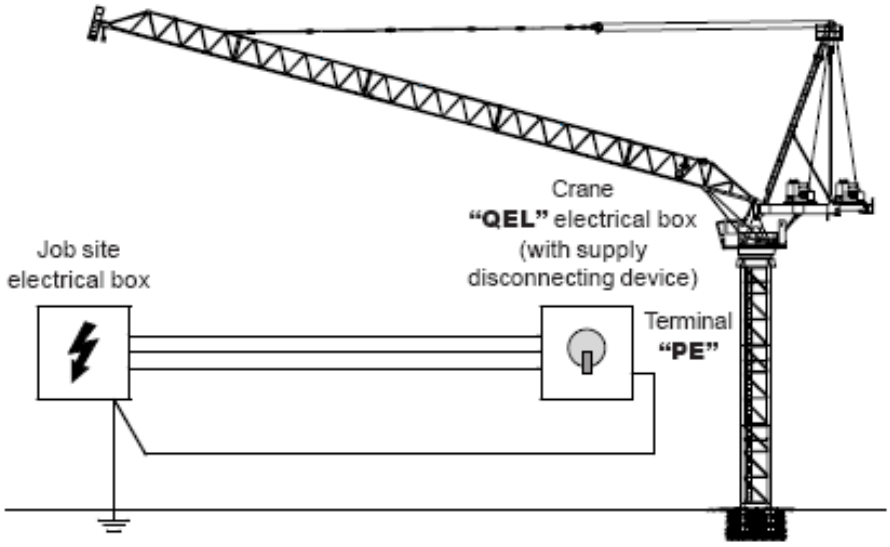

In both systems "PE" terminal, located on "QEL" electrical box (with supply disconnecting device) at the base mast section of the crane, grants the safe grounding of all electrical parts the machine is equipped with.

2.1.5.4.2、Grounding the structure

For size, installation, test and maintenance of the protective grounding system against atmospheric discharges, the laws and standards of the Country where the crane is installed shall be complied

with.

2.1.5.5、Power unit supply

To choose the proper power unit, remember that:

1) the unit shall have to make the voltage drop, depending on "Id" maximum peak current value, keep the designed limits;

2) the frequency value variation cannot exceed ±1% with "In" nominal voltage (-2% with "Id" peak current).

2.1.6、CALIBRATING WEIGHTS

The customer is responsible for the preparation of the weights for the operational testing and for the calibration of the safety devices.

Weights shall be prepared as indicated in Limiting devices adjustment of the crane operation manual.

2.1.7、ANCHORAGES TO THE BUILDING

To reach heights exceeding those indicated, the crane shall be suitably tied to the building.

Consult Jarlway for specific information regarding tie-in locations and slab opening requirements.

Beyond its free travelling or free standing height, the crane must be connected either to the ground by means of guy ropes or to the building using rigid anchorages.

The present brochure deals only with the rigid anchoring to the building.

The following pages define the anchoring positions

2.1.7.1、INSTRUCTIONS

Preparing the crane:

When it is a crane on rail travelling chassis, move it to its static position, tighten the rail clamps and disconnect the travelling mechanism.

In certain cases it is necessary to telescope an additional mast section so that the anchorage frame can be fitted.

VERY IMPORTANT:

Under these conditions the crane is no longer normally autonomous, and it is forbidden to work and to leave the crane free out of service.

When telescoping ,check the perfect perpendicularity of the crane in both planes in order to avoid any variation of distance between crane tower and building.

In order to ensure good connection between frame and crane tower and to prevent the mobile wedges (1) from falling down, it is essential to turn the pieces carrying the welded wedges (2) so that the fitting corresponds to the sketch.

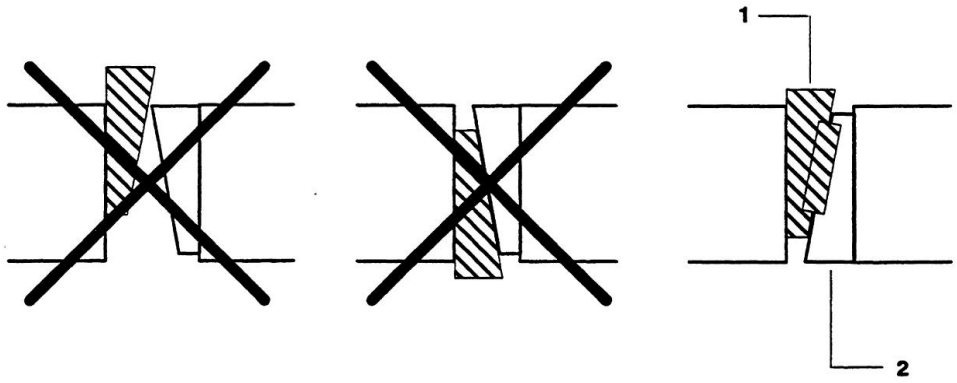

2.1.7.2、CRANE TOWERS AND ANCHORAGES

The heights given in the table opposite are the heights on anchoring feet, measured with regard to the joining surface. For any use of anchorages on cranes with chassis, consult us.

The mast composition is given for the case of optimum use of the anchorage frame, I .e. in its lowest position with a maximum of telescoped mast sections above it.

As the client is responsible for the beams connecting the anchorage frame to the building, consult us when carrying out these beams in order to inform you of the stresses on the level of the frame(s).

IMPORTANT: The cranes working at great heights are subjected to particular working conditions: consult us.

A; Free standing height B; 1 anchorage C;2 anchorage

NDA; Number of mast sections above the last anchorage

NSC; Hook height NEA; Number of mast sections between two anchorages ★; Anchorages tightened ※;Anchorages released

1.6m×1.6m（L46A1）

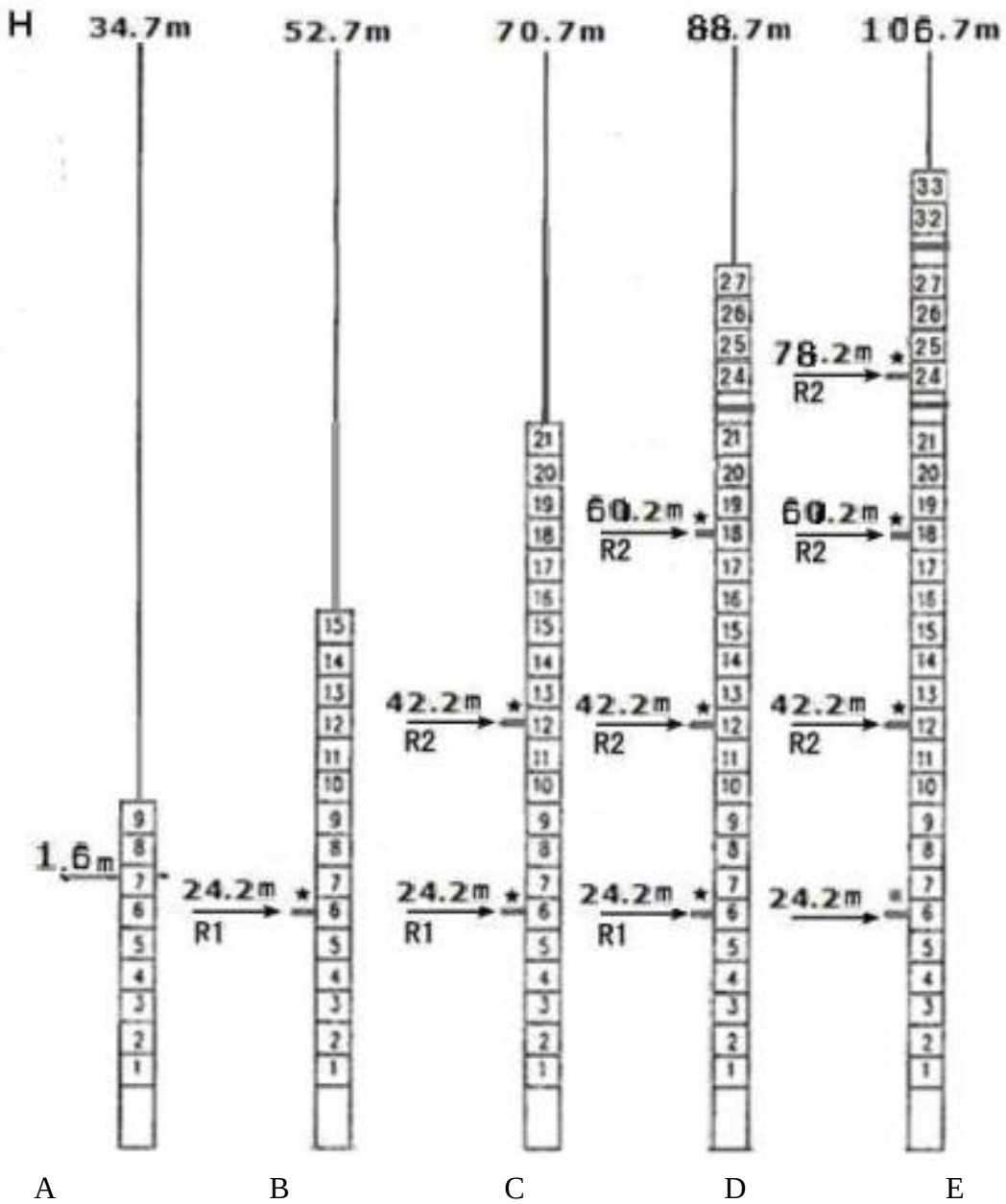

Number of mast sections above the last anchorage: 9

H： Height to hoist jib articulating point

R1：Reactions on the lower anchorages

R2：Reactions on the upper anchorages

NEA Number of mast sections between two anchorages: 6

★; Anchorages tightened ※;Anchorages released

2m×2m（L68B2）

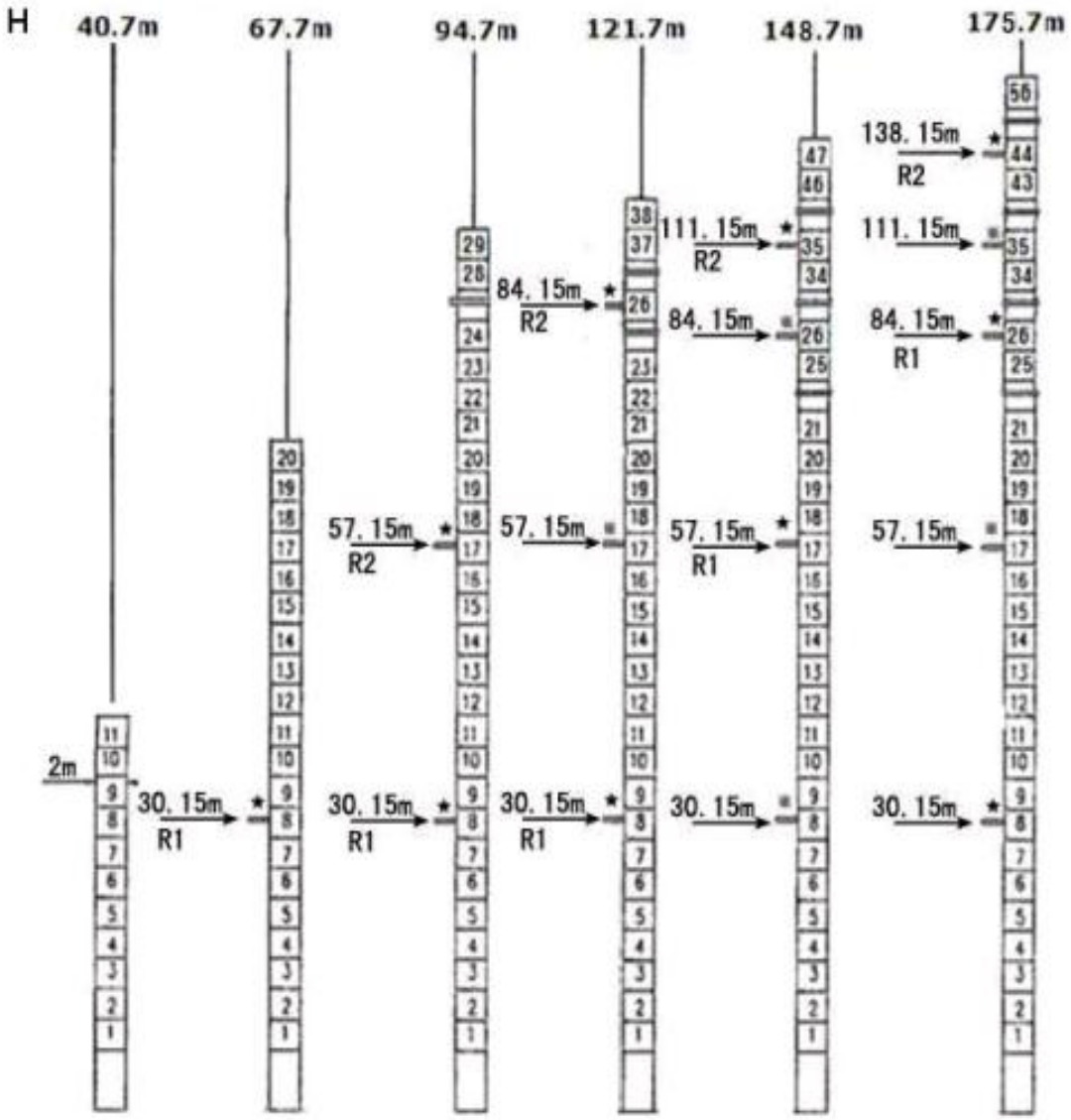

Number of mast sections above the last anchorage: 12

H： Height to hoist jib articulating point

R1：Reactions on the lower anchorages

R2：Reactions on the upper anchorages

NEA Number of mast sections between two anchorages: 9

★; Anchorages tightened ※;Anchorages released

L46A1 Reaction on anchorage（KN）

Mast Height （m） In-service Out of service

10.7	0	0
13.7	0	0
16.7	0	0
19.7	0	0
22.7	0	0
25.7	0	0
28.7	0	0
31.7	0	0
34.7	0	0

Height of the 1st anchorage：24.2m

37.7	121	182
40.7	125	200
43.7	130	219
46.7	135	239
49.7	140	259
52.7	145	280

Height of the 2nd anchorage：42.2m

55.7	121	210
58.7	125	232
61.7	130	256
64.7	135	280
67.7	140	306
70.7	145	332

Height of the 3rd anchorage：60.2m

73.7	121	210
76.7	125	232
79.7	130	256
82.7	135	280
85.7	140	306
88.7	145	332

Height of the 4th anchorage：78.2m

91.7	121	210
94.7	125	232
97.7	130	266
100.7	135	292
103.7	140	320
106.7	145	348

L68B2 Reaction on anchorage（KN）

Mast Height （m）	In-service	Out of service
10.7	0	0
13.7	0	0
16.7	0	0
19.7	0	0
22.7	0	0
25.7	0	0
28.7	0	0
31.7	0	0
34.7	0	0
37.7	0	0
40.7	0	0

Height of the 1st anchorage：30.15m

43.7	104	174
46.7	108	191
49.7	112	210
52.7	117	229
55.7	122	248
58.7	127	269
61.7	131	290
64.7	137	311
67.7	142	333

Height of the 2nd anchorage：57.15m

70.7	104	181
73.7	108	200
76.7	112	220
79.7	117	241
82.7	122	262
85.7	127	284
88.7	131	306
91.7	137	329
94.7	142	354

Height of the 3rd anchorage：84.15m

97.7	104	188
100.7	108	209
103.7	112	231
106.7	117	253
109.7	122	277
112.7	127	301
115.7	131	326
118.7	137	352
121.7	142	379

Height of the 4th anchorage：111.15m

124.7	104	188
127.7	108	209
130.7	112	231
133.7	117	253
136.7	122	277
139.7	127	301
142.7	131	326
145.7	137	352
148.7	142	379

Height of the 5th anchorage：138.15m

151.7	104	188
154.7	108	209
157.7	112	231
160.7	117	253
163.7	122	277
166.7	127	301
169.7	131	326
172.7	137	352
175.7	142	379

2.1.7.3、FITTING THE ANCHORAGE FRAME

- Remove the standard ladder from the mast section which will be fitted with the anchorage frame.

- On the ground, place the two lateral girders (1) and (2) onto the front girder(3)(insert shaft(4) only in order to facilitate spacing girders (1) and (2)).

- Sling and raise the assembly until it reaches the right position on the mast (with the side of the anchoring beam attachment(3) towards the building).

- To facilitate fitting ,use 2 cords for guiding.

- Hook the front girder (3) onto the horizontal bracings located in the middle of the mast section (detail A).

- Fold back lateral girders(1) and (2) and pin them using shafts (5).

- Sling and raise rear girder(6),position it and pin-connect it to the lateral girders using shafts(7).

- Raise and place successively brackets (8),(9),(10) and (11),then pin them onto the girders.

- Place and pin diagonal bracing bar(12).

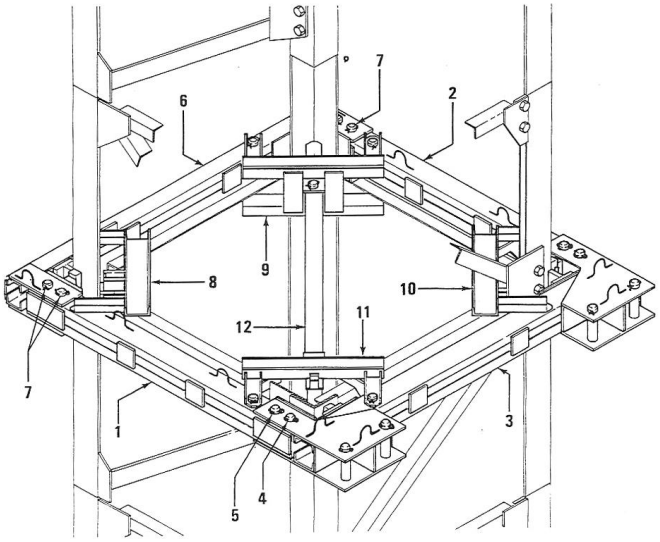
7
6
2
9
8
10
12
11
7
1
3
5
4

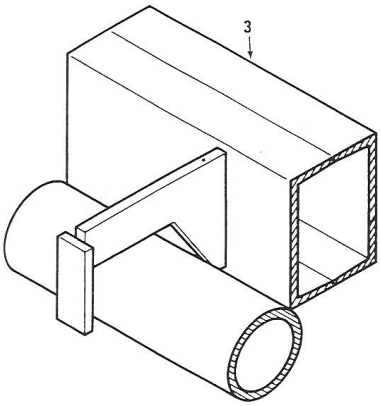
3

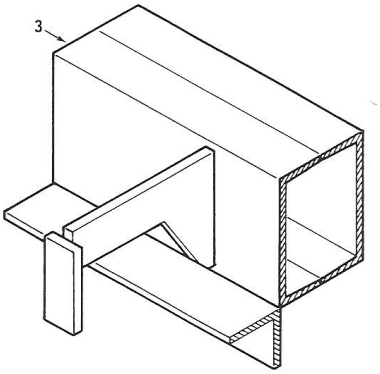
3

Check the horizontal position of the frame, re-adjust if required.

Place outer wedges(1) and act on them in order to bring the frame into contact with the mast uprights.

Place outer wedges (2) and drive them in (detail A).

Having carried out these operations, check that there is no play remaining between the wedges and the mast uprights.

Fit the ladder supplied with the frame instead of the standard ladder, then equip it with the two back loop parts (detail B).

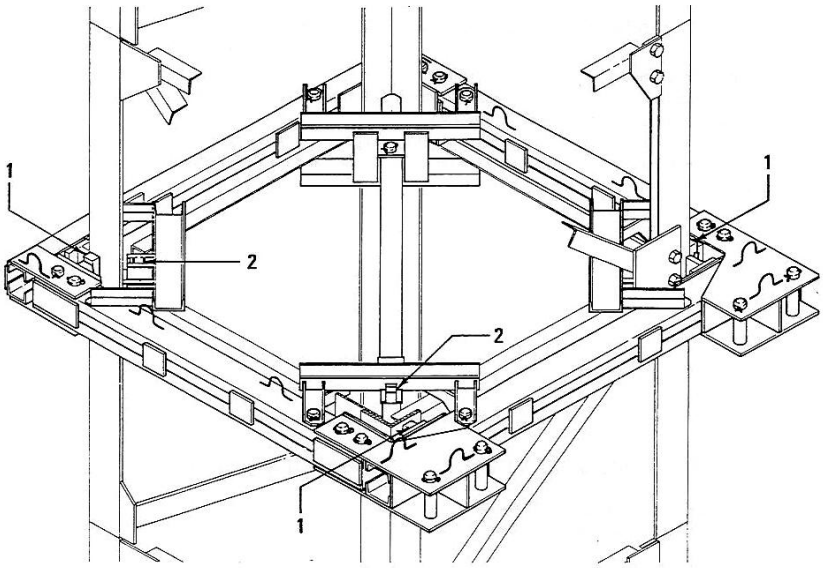

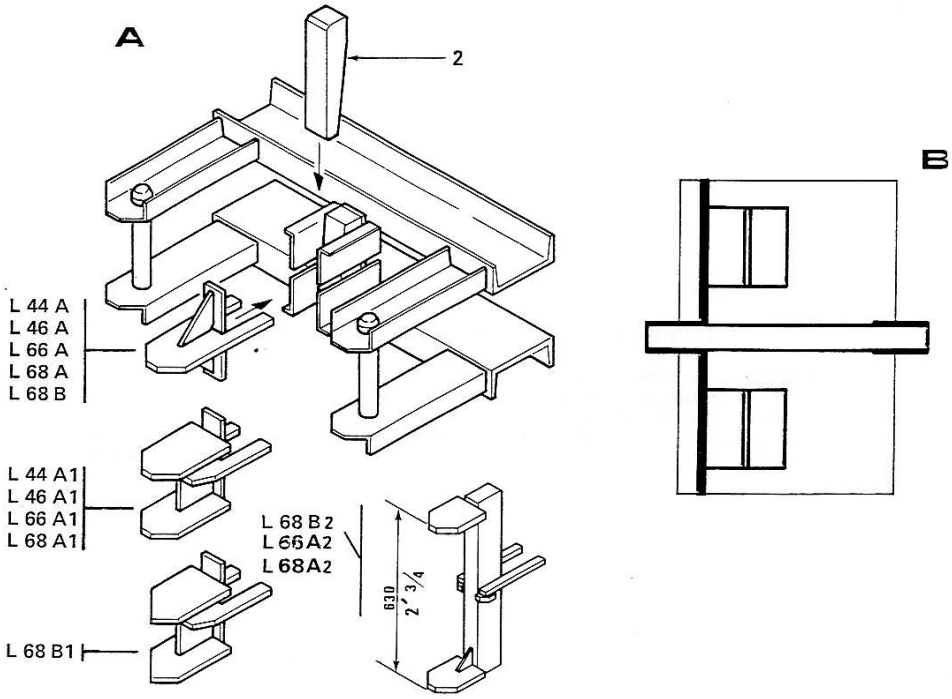

2.2、COUNTERWEIGHTS

2.2.1、PREPARATION

The preparation of the ballast blocks shall be carried out with maximum precision.

They shall be installed once they have been cured and the exact weight has been established.

The weight of the counterweights shall be within a tolerance of ±2,5%.

- high strength of concrete grade Rck 300;

- steel reinforcement Fe B 44K

2.2.2、TYPE AND QUANTITY

Position on the counterjib the exact ballast quantity shown in the following tables, which varies according to the jib length.

COUNTERWEIGHTS	5023
TYPE	WEIGHT [kg]
Counterweight A	5000
Counterweight B	5000

2.2.2.1、Counterweights configuration

1.2.1、Counterweights configuration

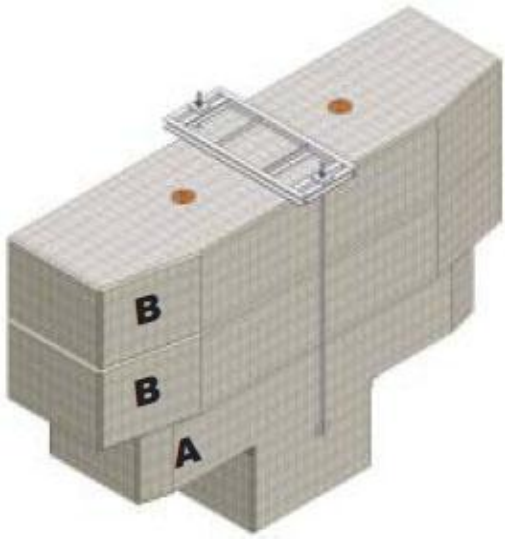

50-45-40-35-30m jib

	Quantity	Weight [t]
Counterweight "A"	1	5.0
Counterweight "B"	2	5.0

Total Weight	15.000

2.2.3、WORKING DRAWINGS

2.2.3.1、Counterweight “A”（5000kg）

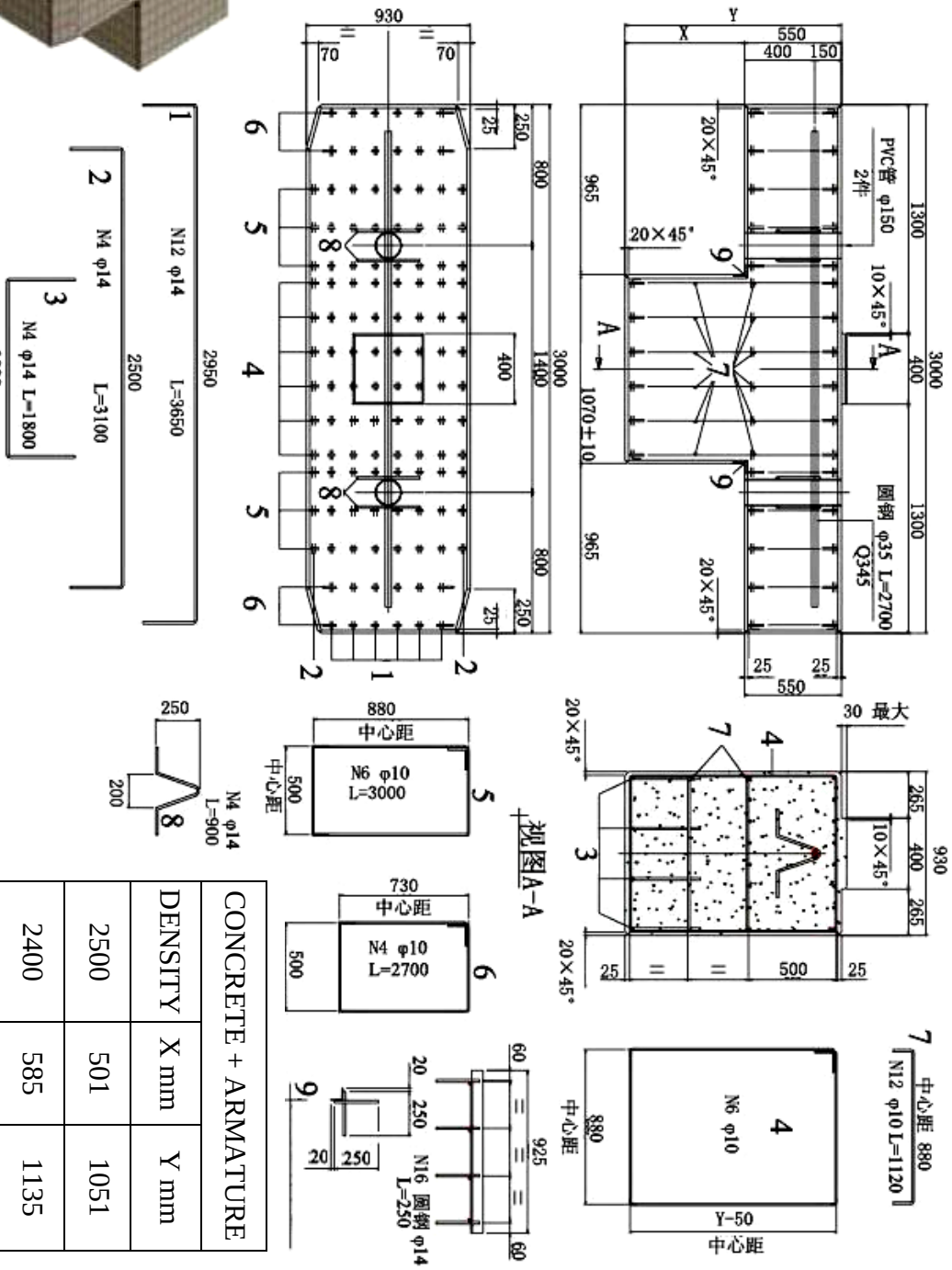

CONCRETE + ARMATURE		
DENSITY	X mm	Y mm
2500	501	1051
2400	585	1135
2300	675	1225

2.2.3.2、Counterweight “B” (5000kg)

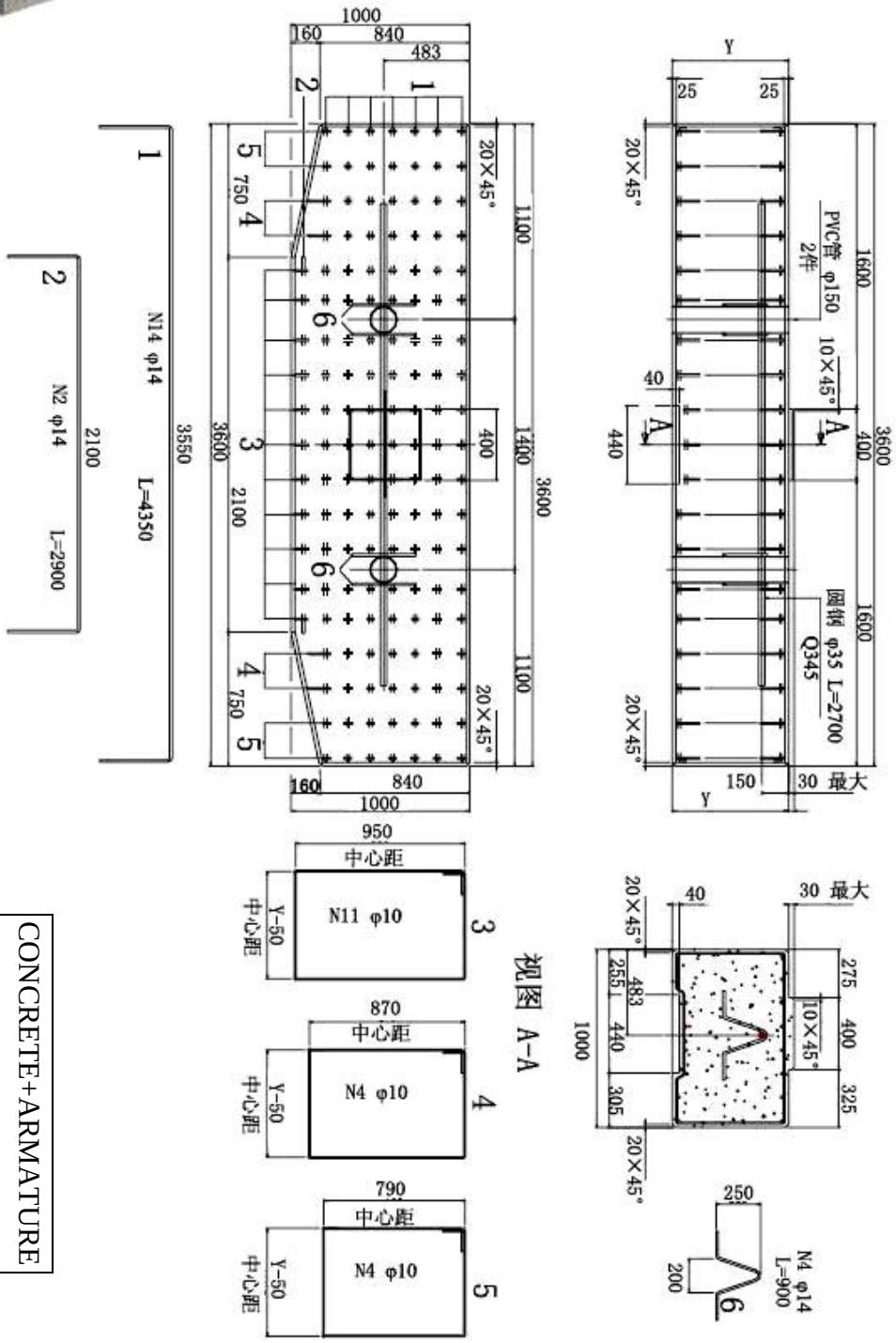

CONCRETE+ARMATURE	
DENSITY	Y mm
2500	582
2400	606
2300	633

2.3、ERECTION TRAVELING CRANE

2.3.1、CHASSIS

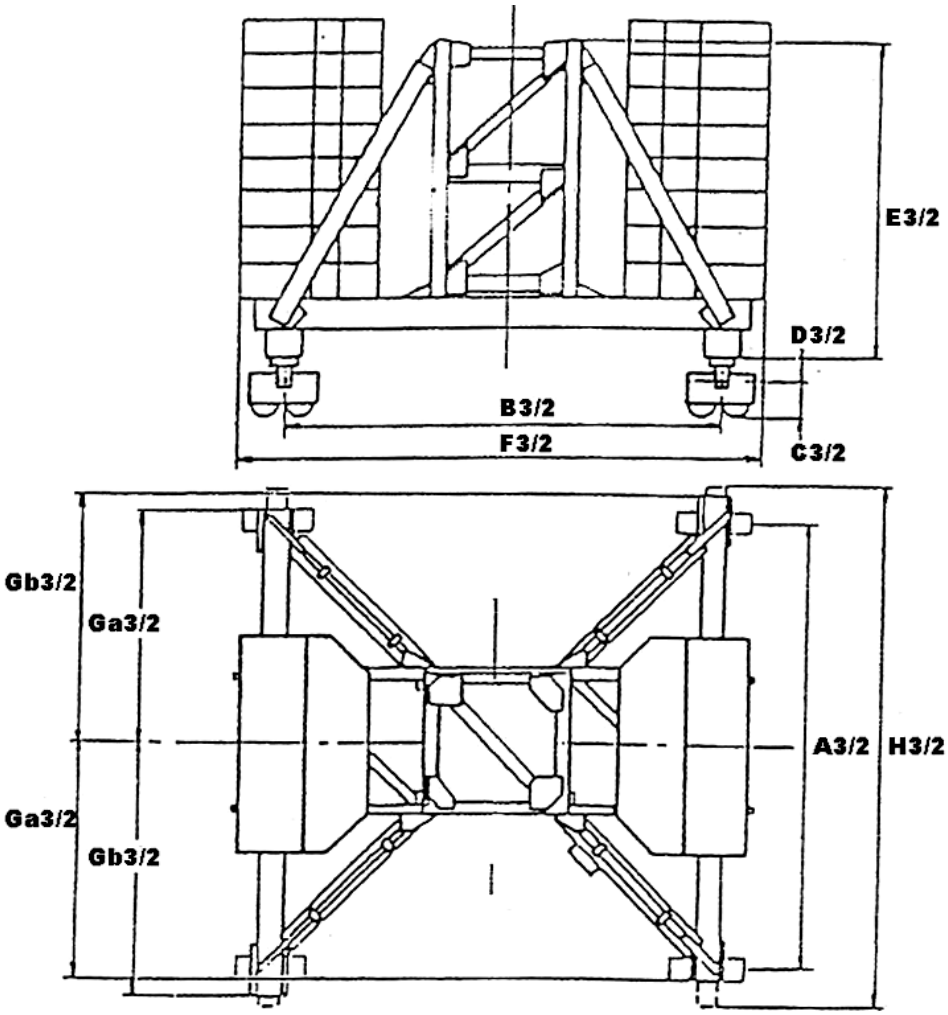

Rep	SAL40	VAL60
A3/2	4.500m	6.000m
B3/2	4.500m	6.000m
C3/2		
D3/2	0.291m	0.291m
E3/2	4.178m	4.340m
F3/2	6.310m	7.160m
Ga3/2	2.440m	3.190m
Gb/2	2.940m	3.690m
H3/2	5.618m	
H3/2	5.748m	7.248m
H3/2		7.528m

2.3.2、FIXING THE BOGIES

2.3.2.1、TRACKS

2.3.2.1.1、CHOOSING THE TRACK

The track dimensions must correspond to the requirements imposed either by:

The material which determines

a) The rail width

b) A pressure per bogie depending on the working begins of the crane.

The rail width and the maxi bogie pressure are shown on the following table and in the data sheet.

Or by the ground.

Homogeneity or non-homogeneity of its pressure.

Types of tracks

Two types of tracks are possible,i.e:

● Track on concrete strips

● Track on wooden sleepers

2.3.2.1.2、TRACK LAYING

RAIL TO BE USED:The rail section must be suitable for the wheels it support; maximum head width 67mm.The best rail to use is one which is slightly worn s this has a good bearing surface. It is preferable to use standardized material (rails and accessories) as shown in the table below.

The user must choose the other dimensional characteristics of the rail according to how latter will be connected to the concrete strips or to the broad flanged girder (HEB) and according to the maximum vertical or horizontal reactions.

The horizontal reaction amounts to about 10% of the vertical reaction.

The track must be carefully designed and laid. It must be:

perfectly horizontal(longitudinally and transversely.)

well bedded down on a solid base.

perfectly straight and with the rails absolutely parallel.

made up of the same type of rails throughout its length.

fitted with rail stops placed at least 1m before the end sleeper.

correctly earthed(according to the standards of the country considered).

For the erection,2 minimum length of track is required (see drawing《Site dimensions for erection》).

The centre portion of the track must be banked up to the level of the rail foot so as to ease the travelling of the site machines.

(The following drawings are given as an indication only. They exclusively apply to a homogeneous soil with a resistance of at least 20N/c ㎡.The crane user is responsible for the laying of the track which must be perfectly level and capable to take the maximum bogie reaction of the machine without causing any local subsidence).

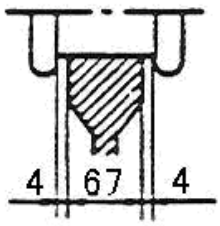	Good： aliahtlly worn rail	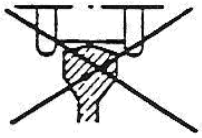	New rail： poor bearing surface
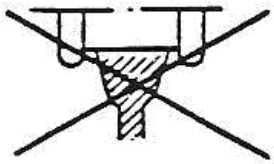	Over worn rail wheels wear	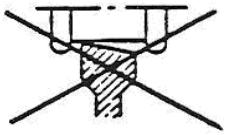	Rail worn on one side poor bearing surface

2.3.2.1.3、TRACK WIDTHS AND RADII OF CURVATURE

The table opposite gives the various track widths depending on the chassis used. The dimensions 4.5m and 6m is the widths between the rail axes.

The radii of curvature are the recommended minimal radii.

Any greater radius can be negotiated without any gauge correction. It is recommended to use the minimal radius in cases of real necessity.

Travelling over the curves stated is only possible if the chassis are equipped accordingly (consult us).

TRACKS	RADII OF CURVATURE
RA-SA 4.50m	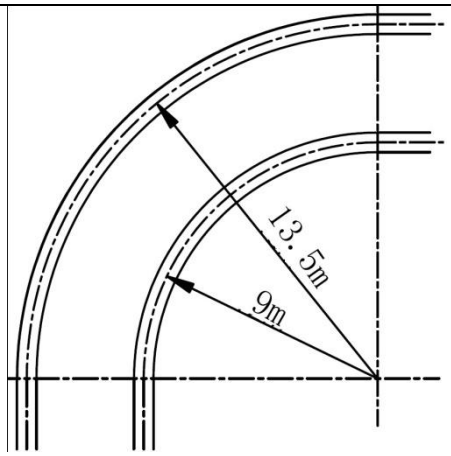
TA-VA 6.00m	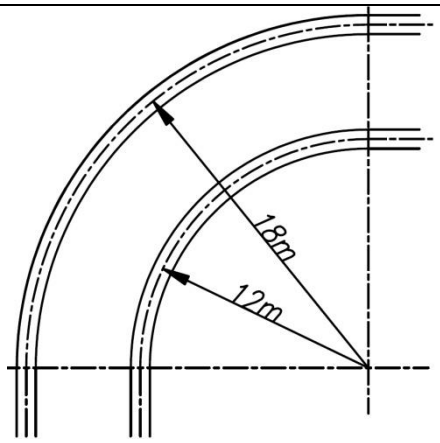
XA 6.00m	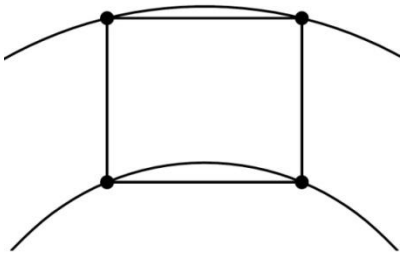 Minimum inner radius：12m

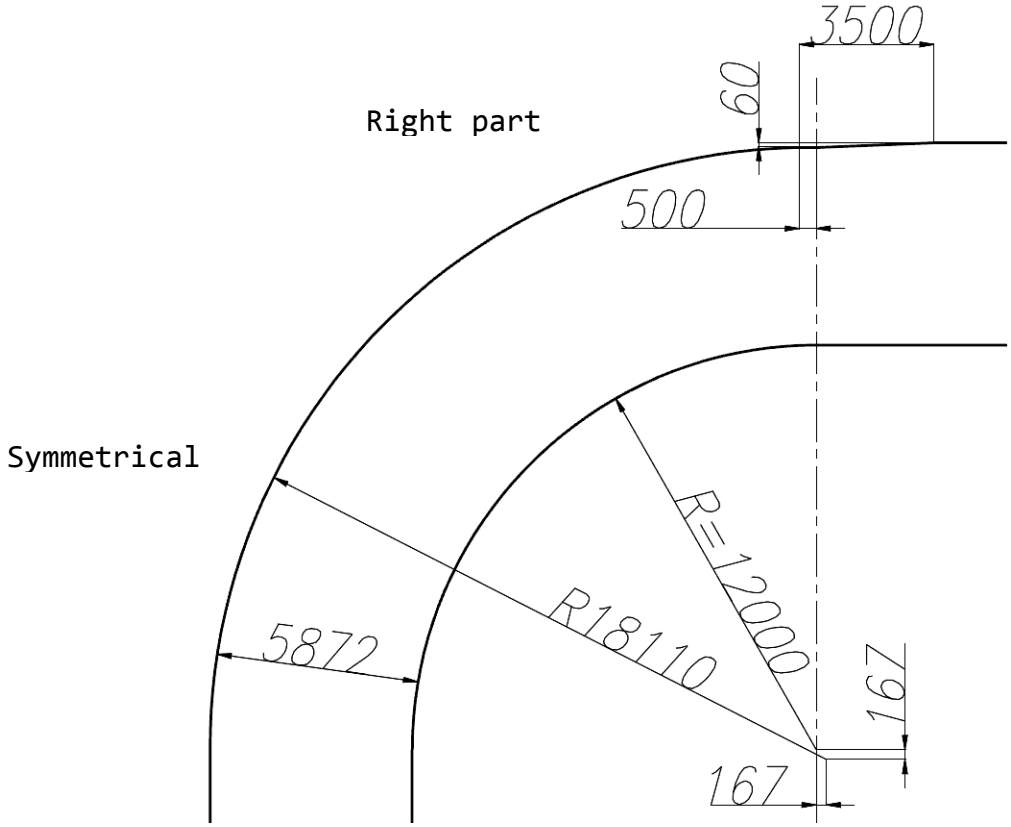

6m Track corrected，minimum inner radius：12m

2.3.2.1.4、TRACKS ON CONCRETE

STRIPS OR ON SLABS

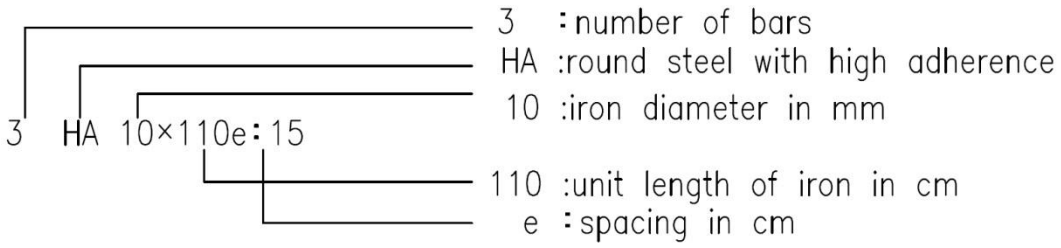

L．B :lower layer

L.H :upper layer

Z.N :neutralized zone

A.H.B :overlapping upper and lower steel

LR.=45t max :longitudinal sleeper for vertical reactions 45t max.

LR.55t-75t max :longitudinal sleeper for vertical reactions from 55t to 75t max.

P.R :weight of rail per metre in kg

:Concrete proportioning 350kg／m3

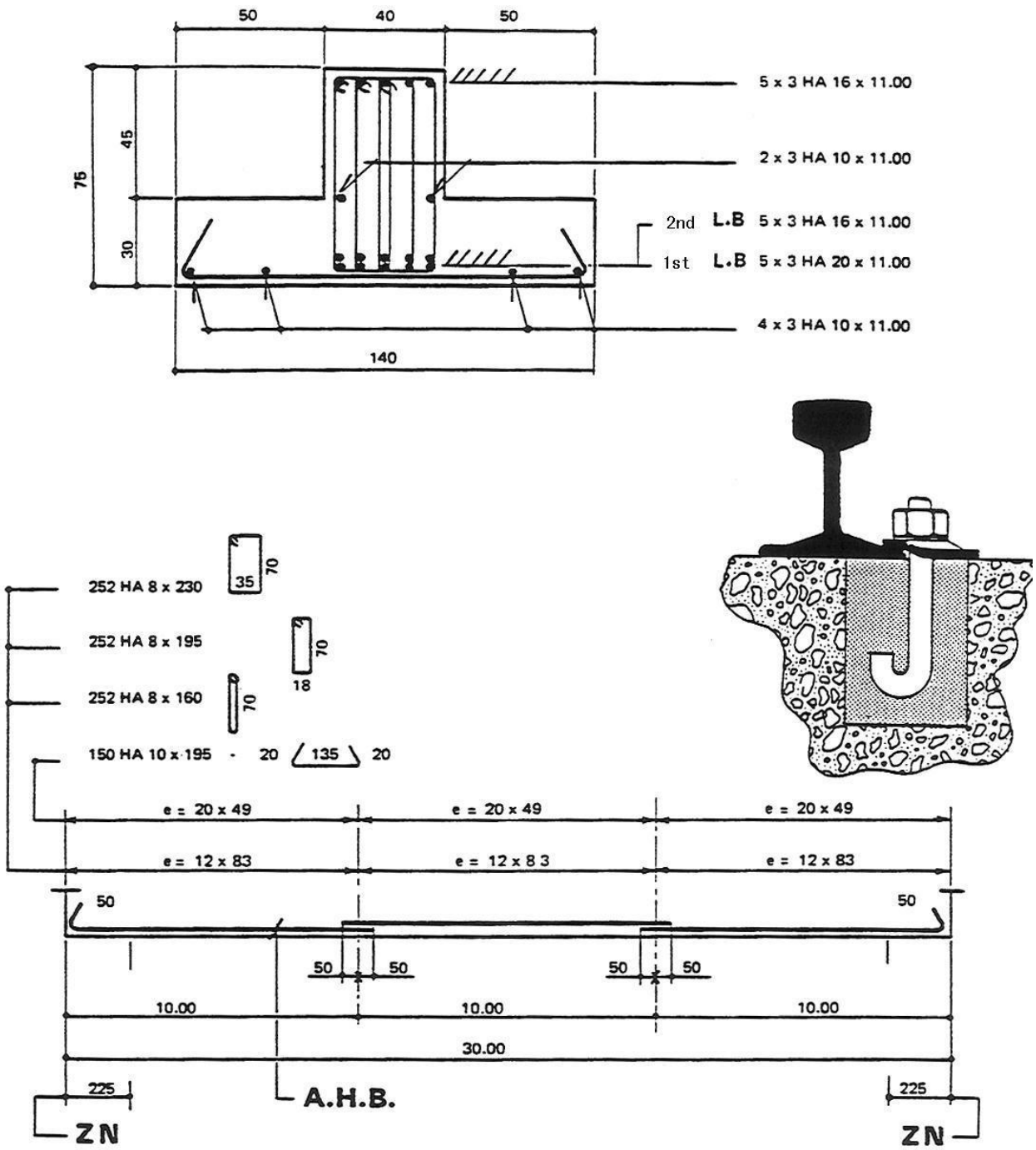

L. R. = 75 t → 100 t

P. R. = 50 kg

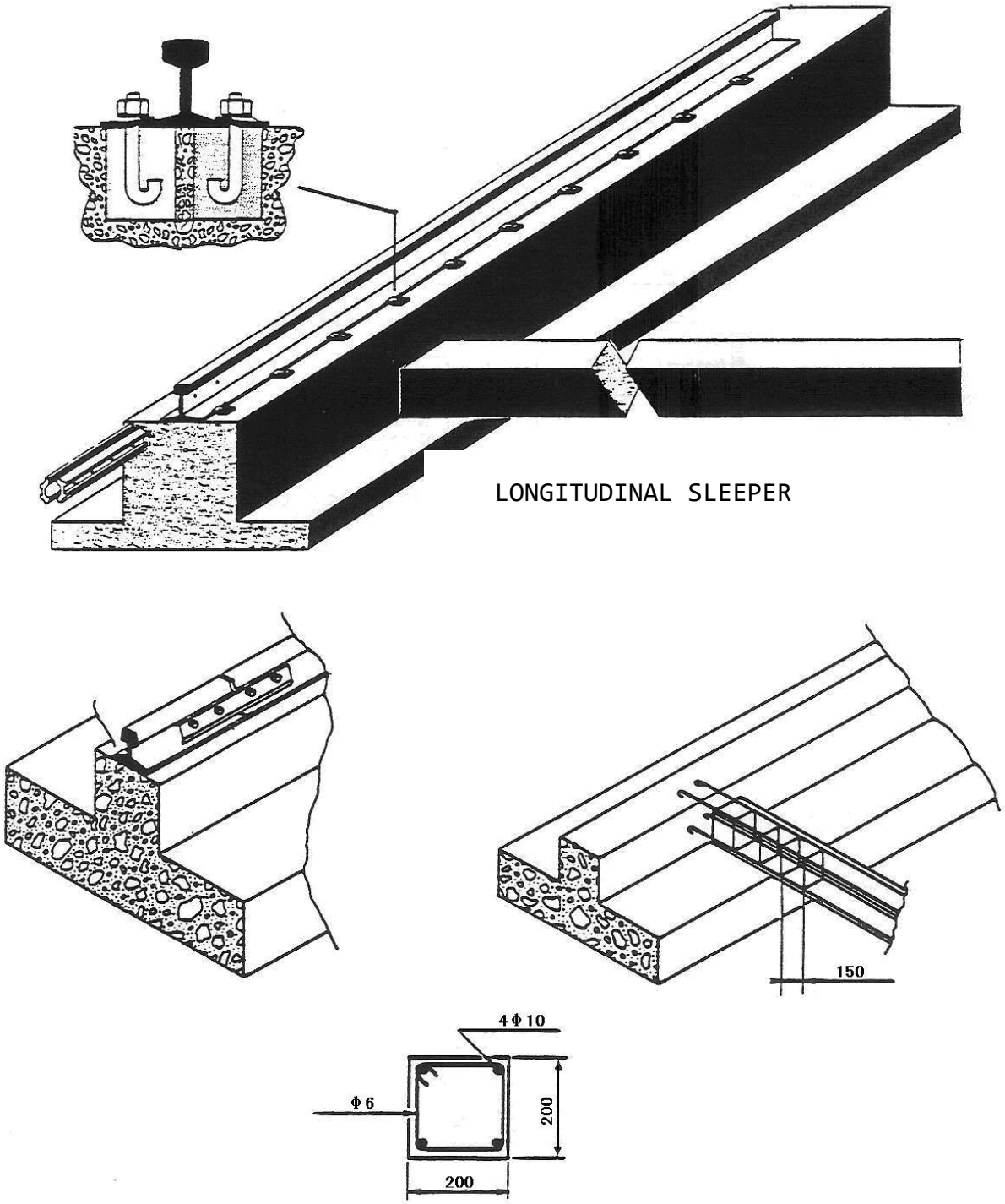

VERY IMPORTANT: The distance between longitudinal sleeper connections is equal to the distance between centers of the track.

2.3.2.1.5、RAILS ON TIMBER SLEEPERS

INTRODUCTION

The elements used for the track construction are determined in relation of the R reaction.

Maximum ground pressure 20N/c ㎡(in all cases)

R : Maximum reactions at t

HEB : Height in mm

H.B : Height of ballast in mm

P.R : Weight of rail per meter in kg

B : Oak sleepers

P.C.C: Compacted broken stones 40/60 in mm

T.R : Type of rail

R	HEB	H.B	P.R
110T	320	350	50
100T	320	300	50
90T	320	250	50

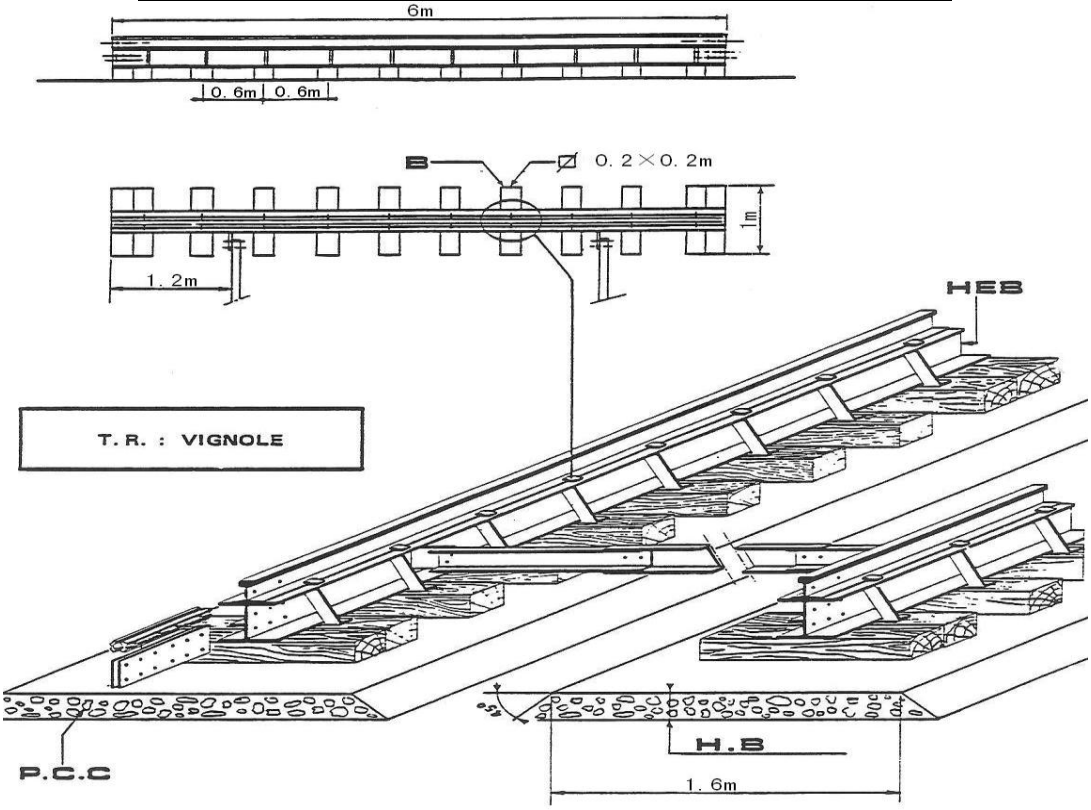

2.3.2.1.6、RAIL STOPS

We remind you that the crane when approaching the track end must be stopped before hitting the safety devices which are not working systems.

The three safety devices are fitted as indicated in the following drawing. They consist of:

a/a travel limit switch

b/a sprung stop(buffer)

c/a fixed stop welded on the rail

The above devices are prescribed by Safety Authorities and must be designed and fitted with particular care. Periodically make sure that they are working correctly.

The mounting of system(a) is described in the relevant section of the handbook.

Check that the ramp (a) is parallel to the rail so that the limit switch roller does not leave the ramp.

The supply and fixing of the devices (a),(b) and (c) are the responsibility of the user.

Different models for device(b),clamped onto the rail, are available from specialized suppliers. When choosing the appropriate devices, pay attention to the crane weight (buffering capacity) and the buffer height which must correspond to that of the stop on the bogies.

Device (c) must be welded on the rail and have appropriate dimensions so as to prevent the crane from running off the track. The following schematic drawing serves as an indication only.

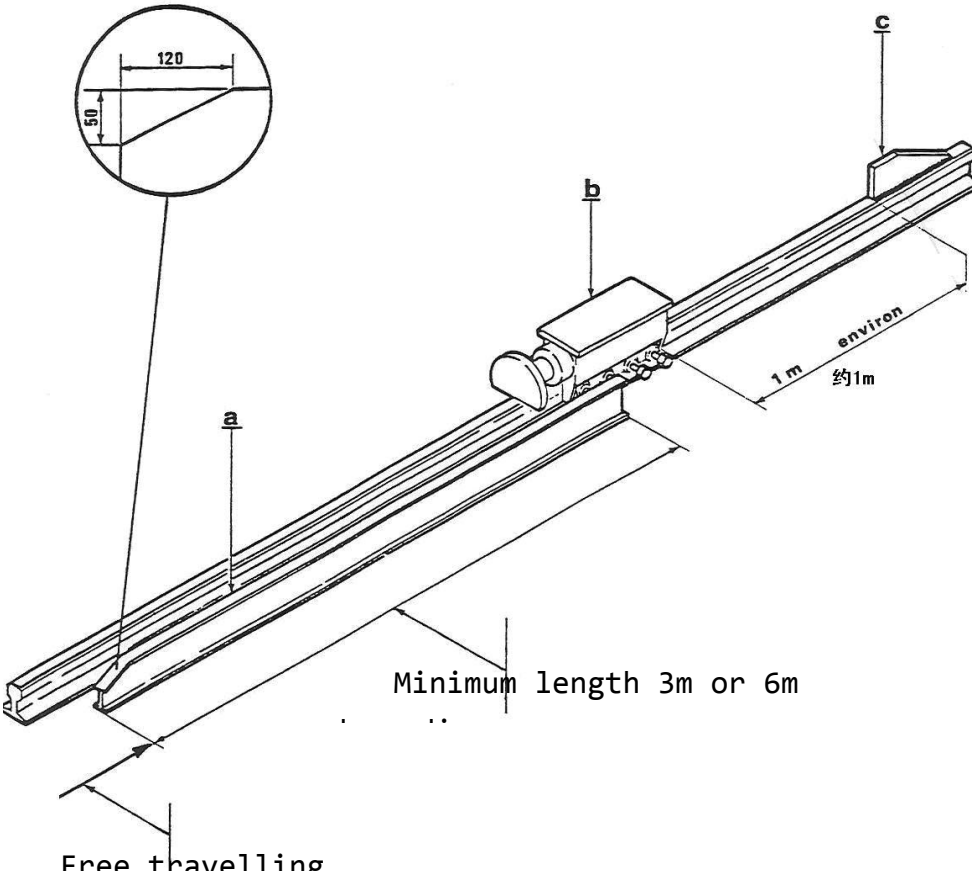
120
50
c
b
a
1 m
environ
约1m
Minimum length 3m or 6m
Free travelling

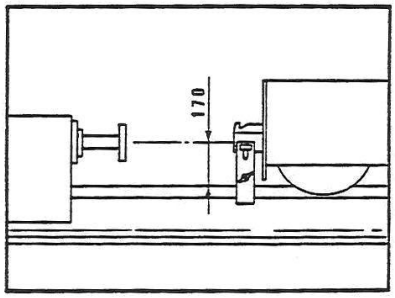
170

2.3.3、BASE BALLAST

2.3.3.1、INTRODUCTION

The base ballast is made up of one or several reinforced concrete blocks which are placed symmetrically on the chassis. Each layer consists of blocks identified by letters.

These blocks must be positioned on the chassis as shown in the figures and the corresponding table, i. e. between the attachment points of the ballast fixing device, if latter is required.

The reinforcing of the concrete blocks, except the one shown in the figure. is left up to the customer who has also the responsibility for the ballast preparation .No supply from us.

THE REACTION ACTING ON THE BOGIE IS GIVEN FOR A FORCE PASSING THROUGH

2.3.3.2、BASE BALLAST TABLE

CP: Mast composition

H : Height to hoist jib

articulating point

NR: Number of layers

ND: Number of blocks

LE: Minimum ballast required

R.ES: Stresses in service

R.HS: Stresses out of service

RH: Horizontal stresses

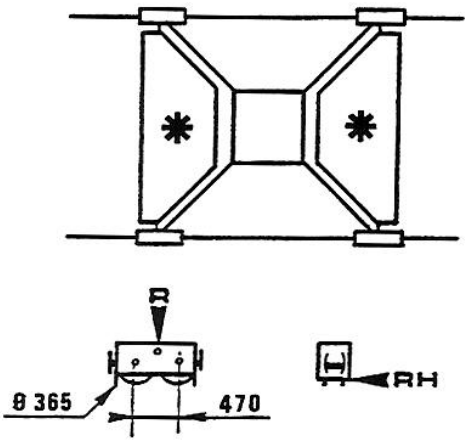

C.P.	H	N.R.	N.D.	L.E.	R.E.S.	R.H.S.	R.H.
1+1+1	15.1m	5	10	60t	62t	56t	7.12t
1+2+1	18.1m	5	10	60t	63t	56t	7.18t
1+3+1	21.1m	5	10	60t	65t	57t	7.24t
1+4+1	24.1m	5	10	60t	66t	57t	7.30t
1+5+1	27.1m	5	10	60t	67t	57t	7.36t
1+6+1	30.1m	5	10	60t	69t	58t	7.42t
1+7+1	33.1m	5	10	60t	71t	58t	7.48t

2.3.3.3、BALLAST BLOCK DETAILS

Ballast block

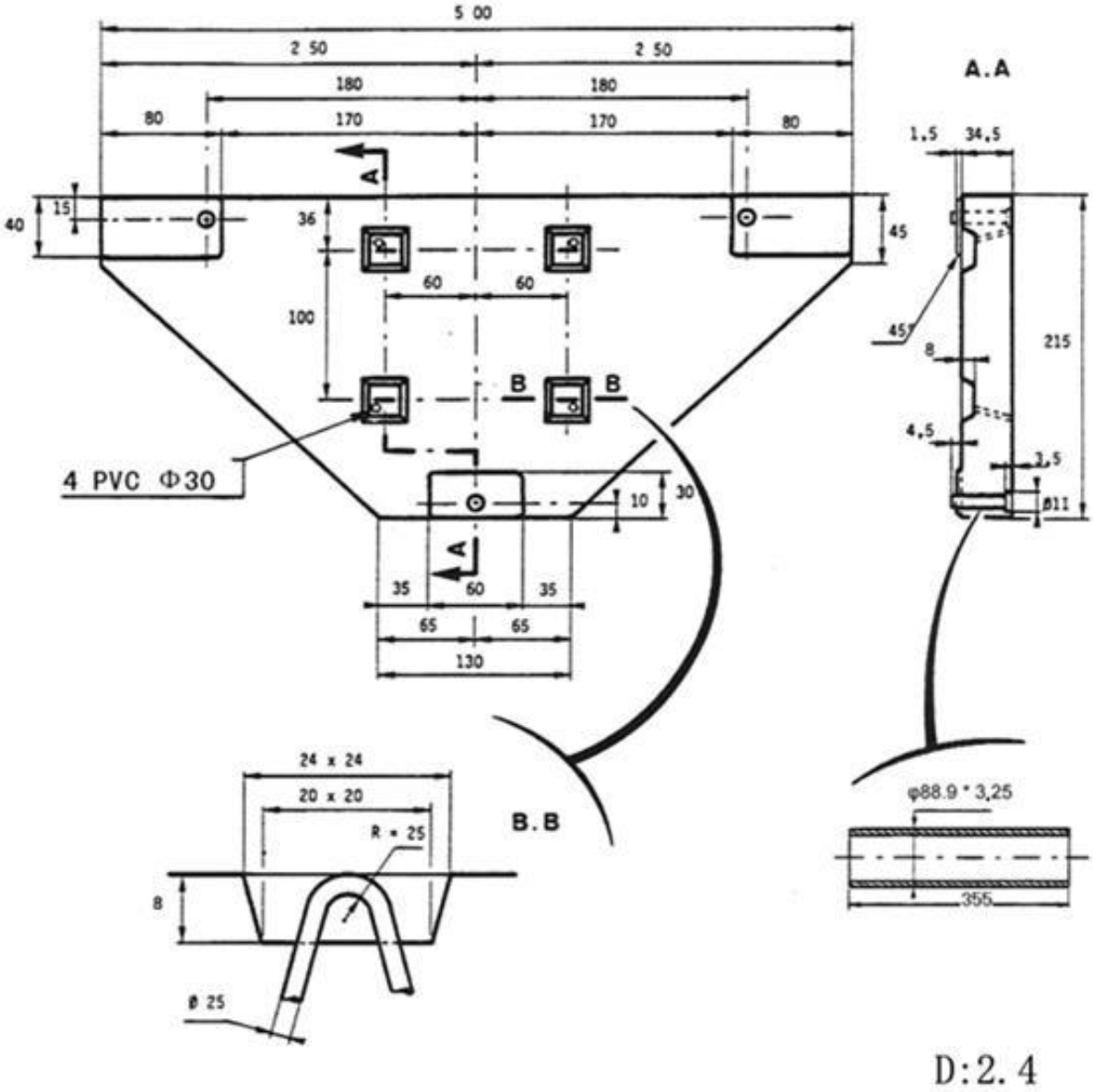

Ballast block：6000kg

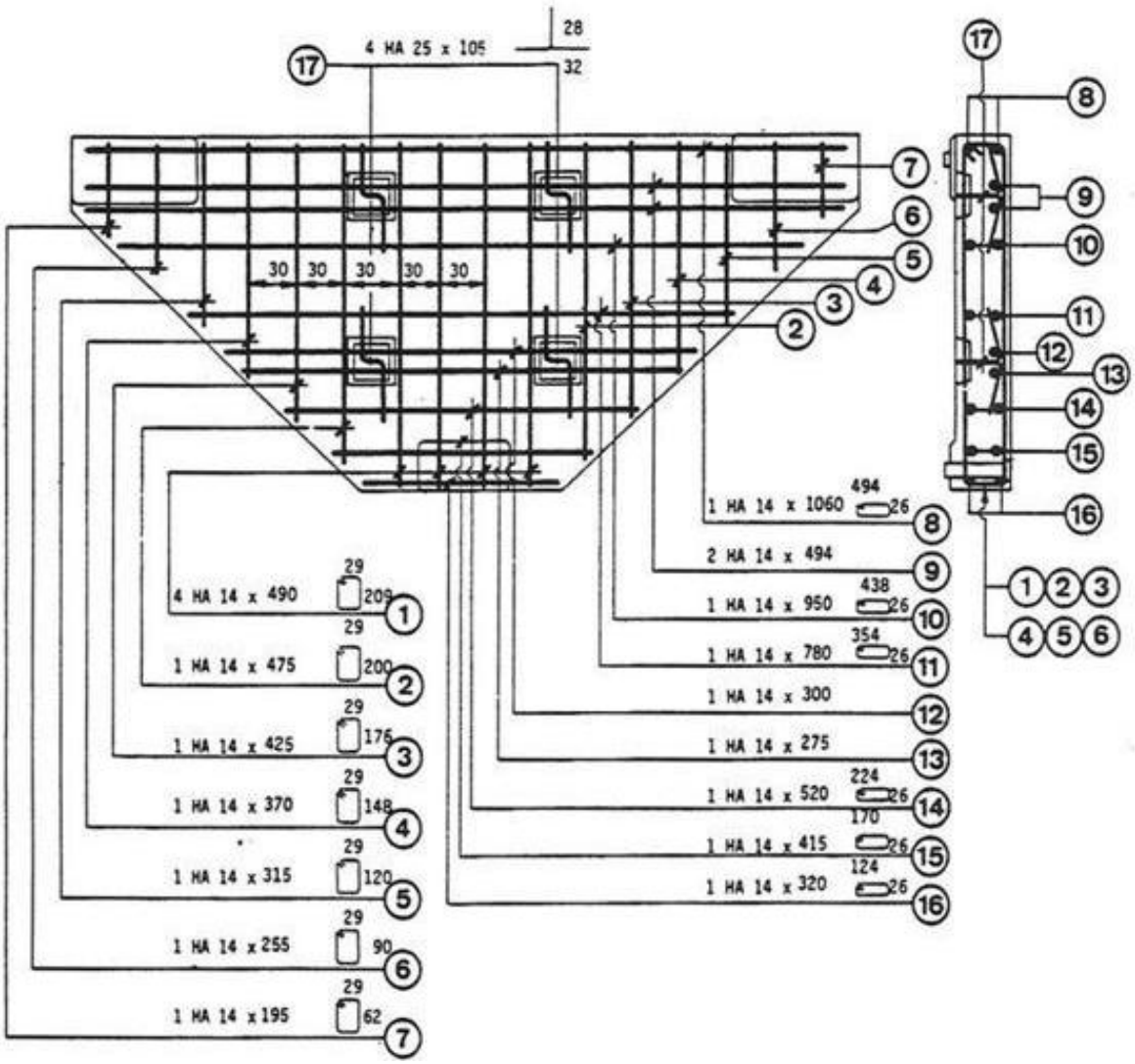

Steel weight：157kg

2.3.4、ASSEMBLING AND BALLASTING THE TRAVELLING CHASSIS

2.3.4.1) Description and weight

2.3.4.2) Crossbeam equipment

2.3.4.3) Mounting the chassis onto the Bogies

2.3.4.4) Chassis equipment

2.3.4.1、DESCRIPTION AND WEIGHTS

There exist 2 chassis unties made up of :

a/for straight track chassis(V.D.)

2 cross-members (1) carrying on either end of a fixed fork(3).

b/for straight/curved track chassis(V.V.)

2 cross-members (2) carrying on one end of a fixed fork (3) and on the other end of a sliding fork (4).

All the remaining parts of the equipment are common to both chassis units.

These parts are:

One longitudinal member block (5) and the bolts (6) to fix it onto the cross-members four struts (7) and connecting pins (8) and (9).

One basic mast unit (10) and the bolts (11) fixing it into the longitudinal members.

Four obliquely legs (13) and pins (14) and (15).

The following table specifies the weights of the main parts and lists the connecting means (bolts and pins) depending on the chassis type used.

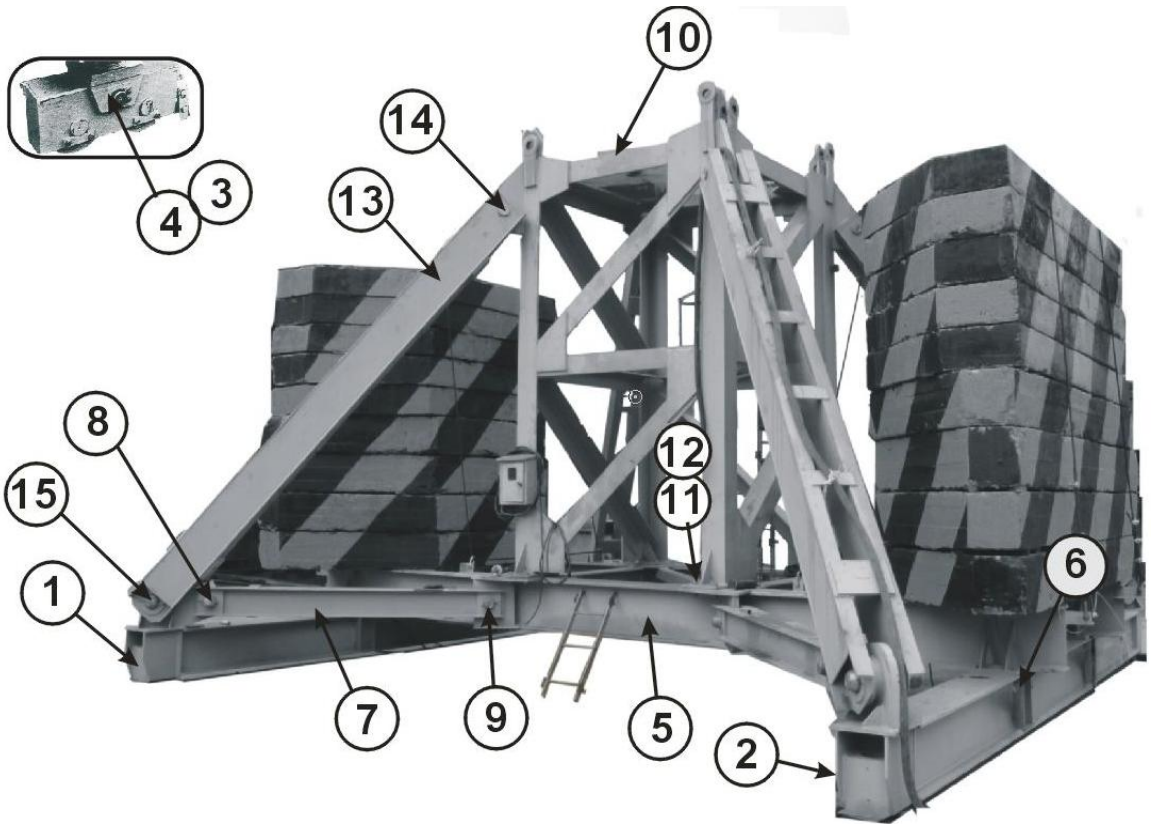

Rep	Nb	Weights、Dimensions	
		Description	2m
1	2	Travere	1569kg
2			kg
3	2	RT443	400kg
4			kg
5	1	Side member.	2140kg
6	16	Bolt.	M24×62
7	4	Strut tie	205kg
8	8	Pin.	90×170L
9			
10	1	Basic mast unit.	3540kg
11	16	Bolt.	M30×85
12	16	Washer.	M27
13	4	Obliquely legs.	660kg
14	4	Pin.	90×280L
15	4	Pin	110×220L

2.3.4.2、CROSS-BEAM EQUIPMENT(for chassis V.V.)

EIXED FORK: there are two mounting types

A/with ball thrust bearing and compression spring

B/with torch-cut washer

MOBILE FORK C/It comprises:

a fork (1),a spacer(2)equipped with a grease nipple(3),a ball thrust bearing(4),a compression spring(5),a mobile block(6)equipped with a spring pressure system(7),two half washers(8) and (9),a protection plug(10) with screws and washers(11)locking plate(12) with screws and washers (13).

Ex-works, the cross-beams are initially fitted for a given chassis type, no mounting is to be carried out on site.

Before fitting on the bogies, check the cleanness of the parts being in contact, clean and re-grease if required, make sure that they work correctly by turning and sliding the forks.

IMPORTANT: Before the 1st putting into service check the state of the track (evenness, local ground subsidence, fitting and connecting of the rails etc),a bad installation may cause break-downs.

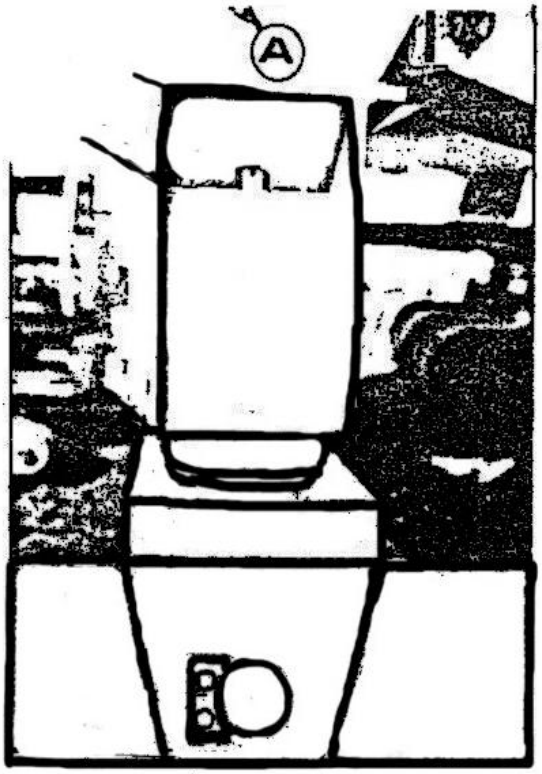
A

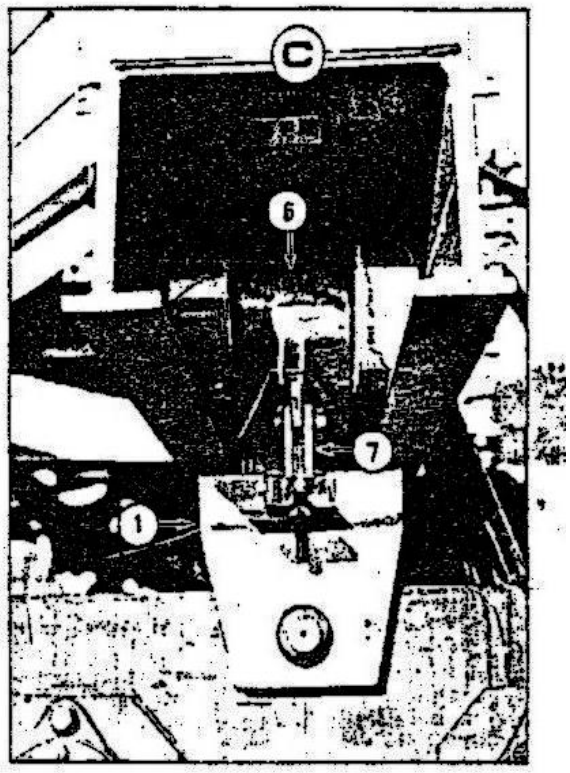
C
6
7
1

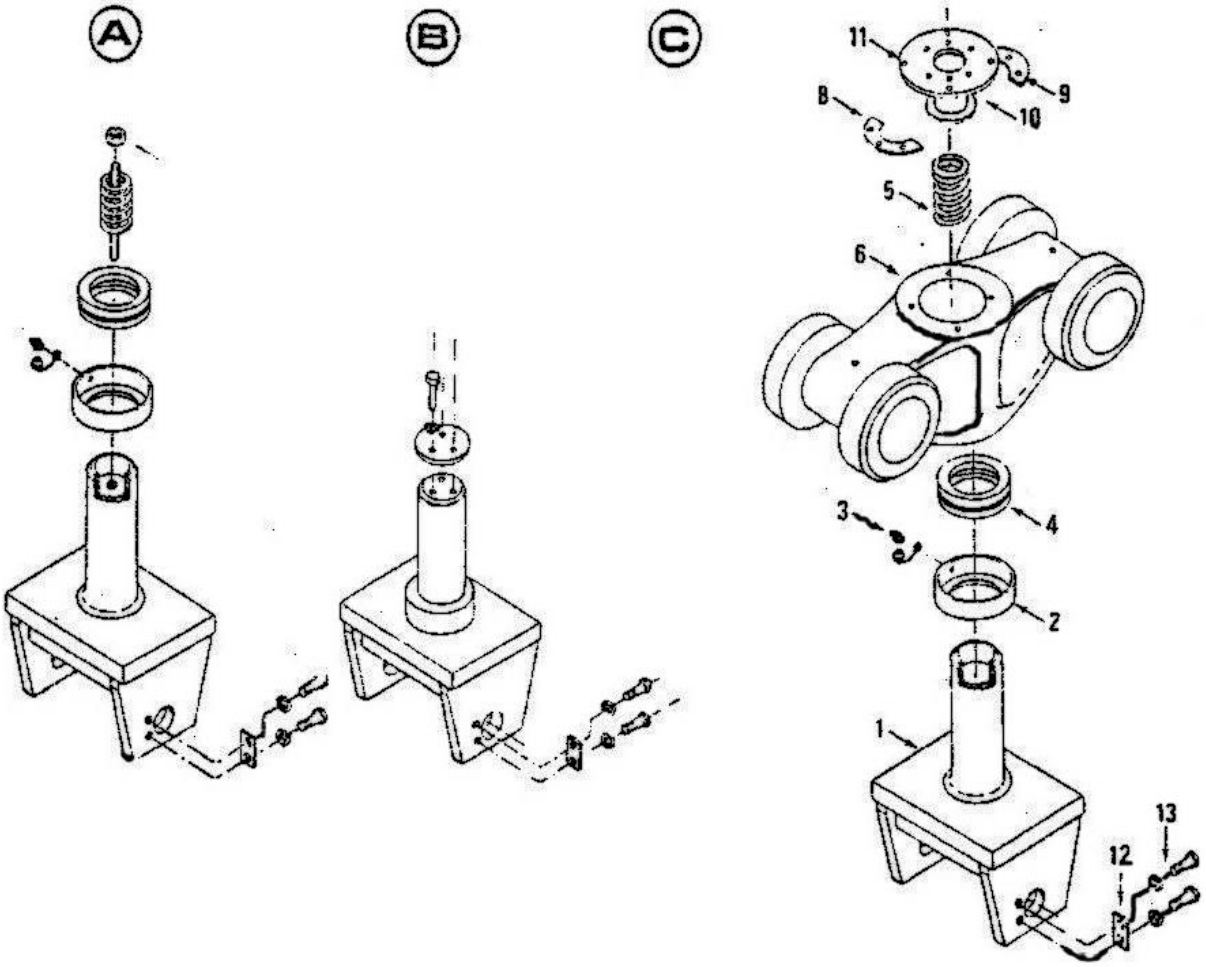
A
B
C
11
9
8
10
5
6
3
4
2
1
13
12

2.3.4.3、MOUNTING THE CHASSIS ONTO THE BOGIES

ATTENTION: The ladder position of the basic mast (A) and the chassis (B) determines the telescoping direction (F).

Make sure that the chassis position allows to obtain one of the two possible telescoping directions F1 or F2.

Fit slings around the cross-members and raise them; slew the forks, if required and remove the locking. Plate (1).

Engage the forks onto the bogies, dimension A (widest side with regard to the bogie pivot axis) on the inside of the track (detail C).

Make sure that the bogie pivot axis is always in the axis of the wheel-rolling path (detail D).

Drive in the shaft until its neck reaches the position allowing to introduce and to fix the locking plate(1) by means of screws and washers(2)(see detail E).

Pack up the cross-members in order to keep them in horizontal position, fit slings around the side member block(3),raise it and place it onto the cross-members; fix it using 4×4 bolts(4)but do not tighten.

Place the strut ties (5) by means of 4×2 shafts (6).

If required, set the mast section upright which is slung by means of 4 rope lines from the top and place it into the side member block, lining up the ladder attachments. It will be fitted by means of 4 fishplate bolts (7)at each corner, with the nut on the side of the side member plate. Make sure that the bearing surface are clean and ensure correct tightening.

Lift up the oblique legs (9) by slinging them at the 2nd plate from the end fitted with part).

Pin this end onto the basic mast unit by means of a shaft (12);the partserves to hold the shaft in position without assistance of a 2nd erector.

Pin connect with the cross-members by means of a shaft (12).

Tighten the bolts (4) of the side-member/cross-member assembly.

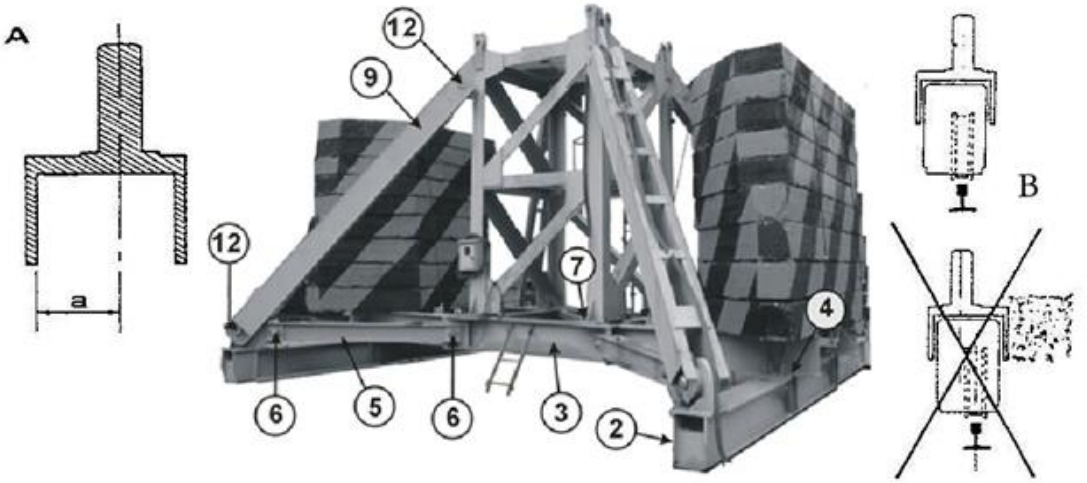
A
a
12
9
12
7
4
6
5
6
3
2
B

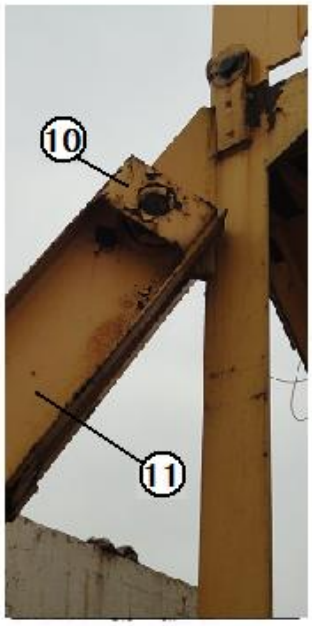
10
11

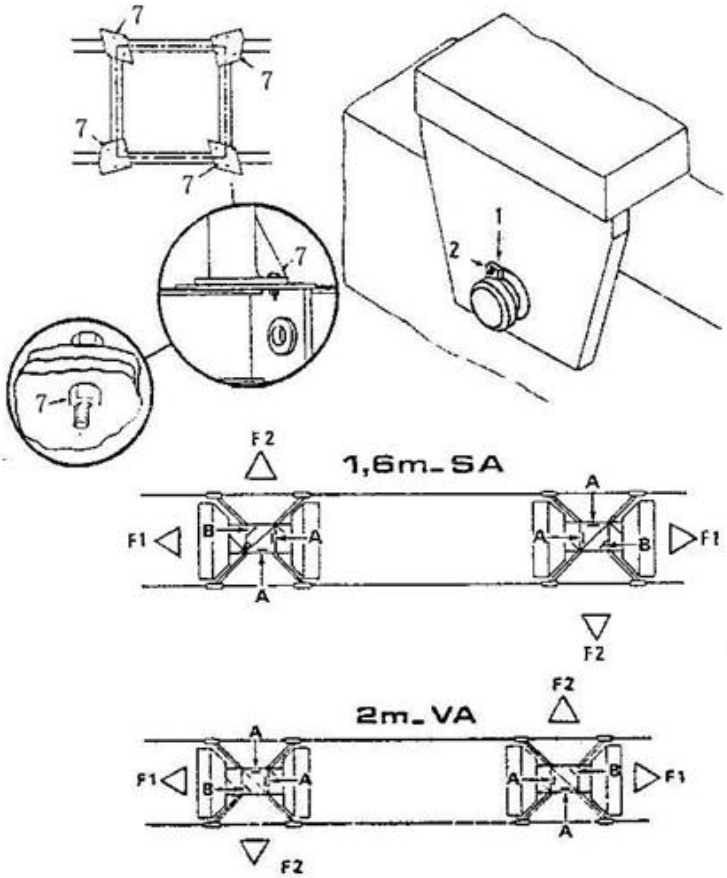
7
7
7
7
7
1
2
F2
1,6m_SA
F1
B
A
A
A
B
F1
F2
F2
2m_VA
A
F1
B
A
A
B
F1
A
F2

2.3.4.4、CHASSIS EQUIPMENT

A FITING THE LADDERS

Group the ladder components: the 3.60m ladder(1),the 1.5m ladder(2),the fixing means(3) and the locking wedges(4),the hand-rail(5) and its fixing brackets(6).Unfold the back loops of ladder(1)pivoting them downwards: then fit in the following order;

Ladder(1)then ladder(2)onto the ladder supports using the fixing means(3)and the locking wedges(4).After fitting the basic mast, install the hand rail(5) and place the brackets(6).

B ELECTRICAL CONTROL PANEL

This panel mounted onto a support(7)is fastened onto a strut or onto the basic mast opposite to the cable winder, if any These same supports are used to fix the panel onto the basic mast if the crane is mounted on anchoring feet.

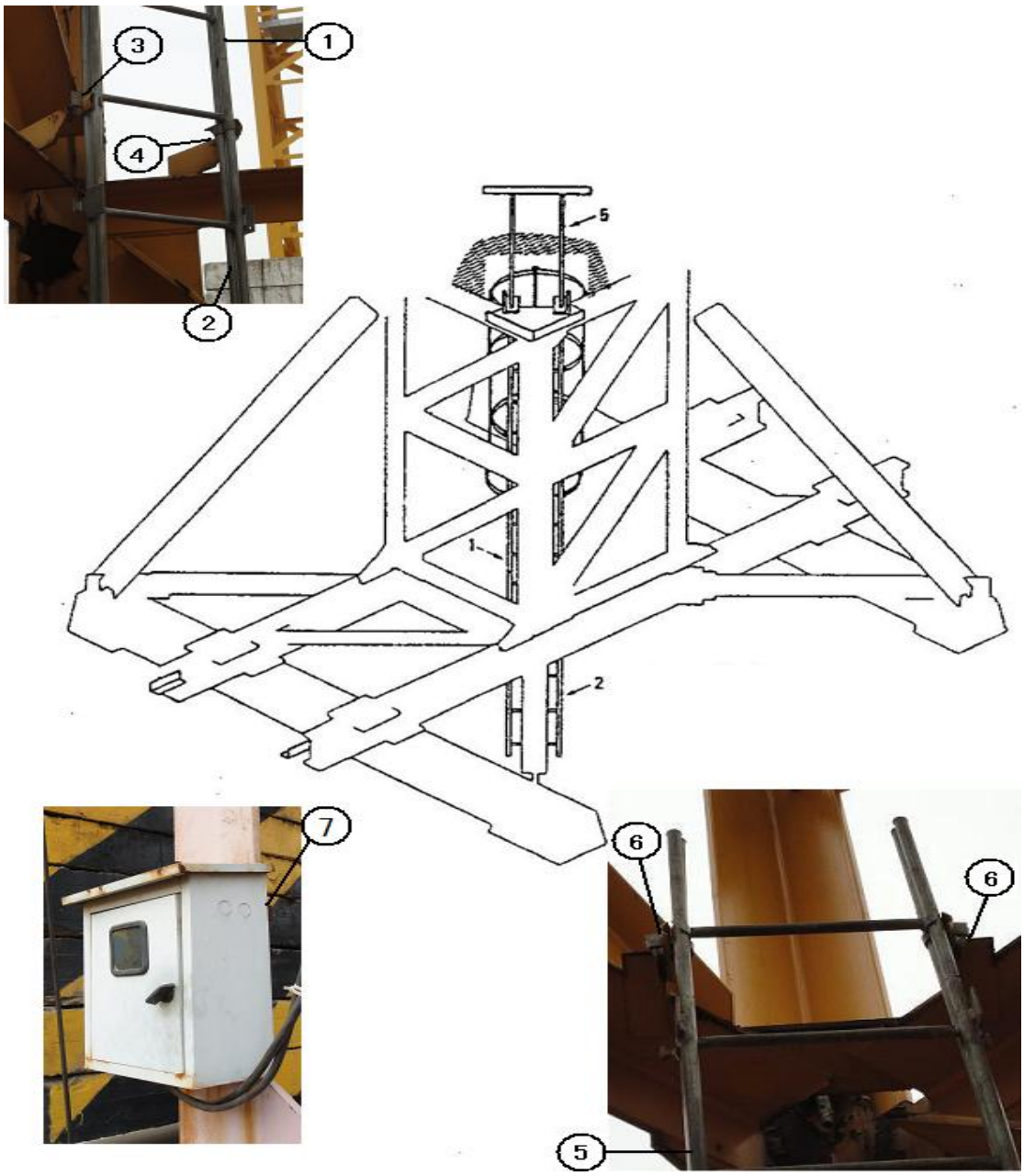
3
1
4
2
5
1
2
7
6
6
5

2.3.5、BALLASTING

We recommend to ballast the machine depending on its working height and according to the indications Ⅱ.

Base Ballast Brochure observing the block positioning on the longitudinal member(blocks with blunted corners on the mast side).If the total ballast is not available, ensure at least the ballasting provided for its minimum height.

The remaining ballast can be placed later on(before telescoping) using the crane.

Certain standards require the ballast to be fixed on the chassis for cranes supplied in countries submitted to these standards. There are two devices:

A Device with safety bars.

B Device with safety ropes.

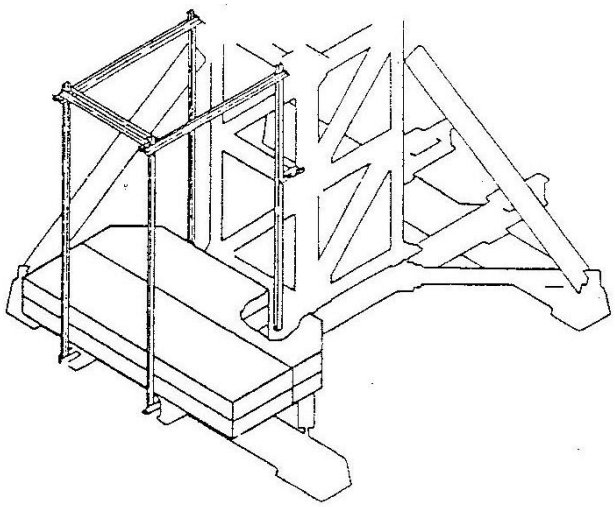

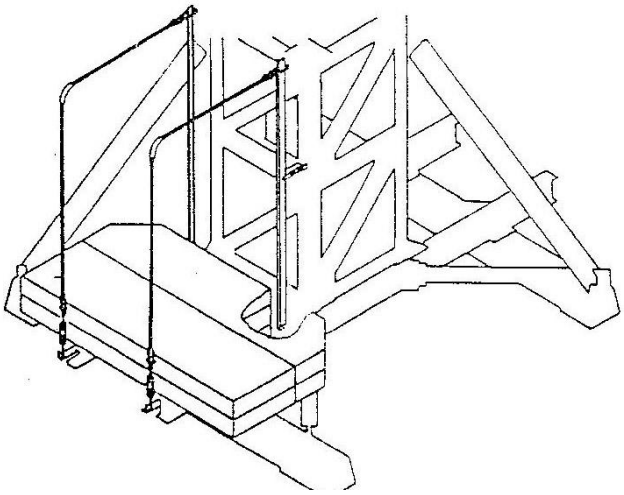

A Device with safety bars

2 uprights (1) equipped with fastening plates(2);2 uprights(3);2 fastening plates (4) for the uprights (1) on the chassis (5);2 bars (6);1 bar(7).

Fit uprights (1) onto the longitudinal member(2 shafts 20×40C,mark 8) and connect them with the basic mast unit by means of parts(4) using shafts (20×40C,mark 9);split-pin. BALLAST.

Complete the device by fitting uprights(3),then bars (6) and bar(7).(6)and (7) will be inserted into the uprights and fixed at (10) by means of 4 shafts 20×70 for (6) and 2 shafts 20×115 for (7).

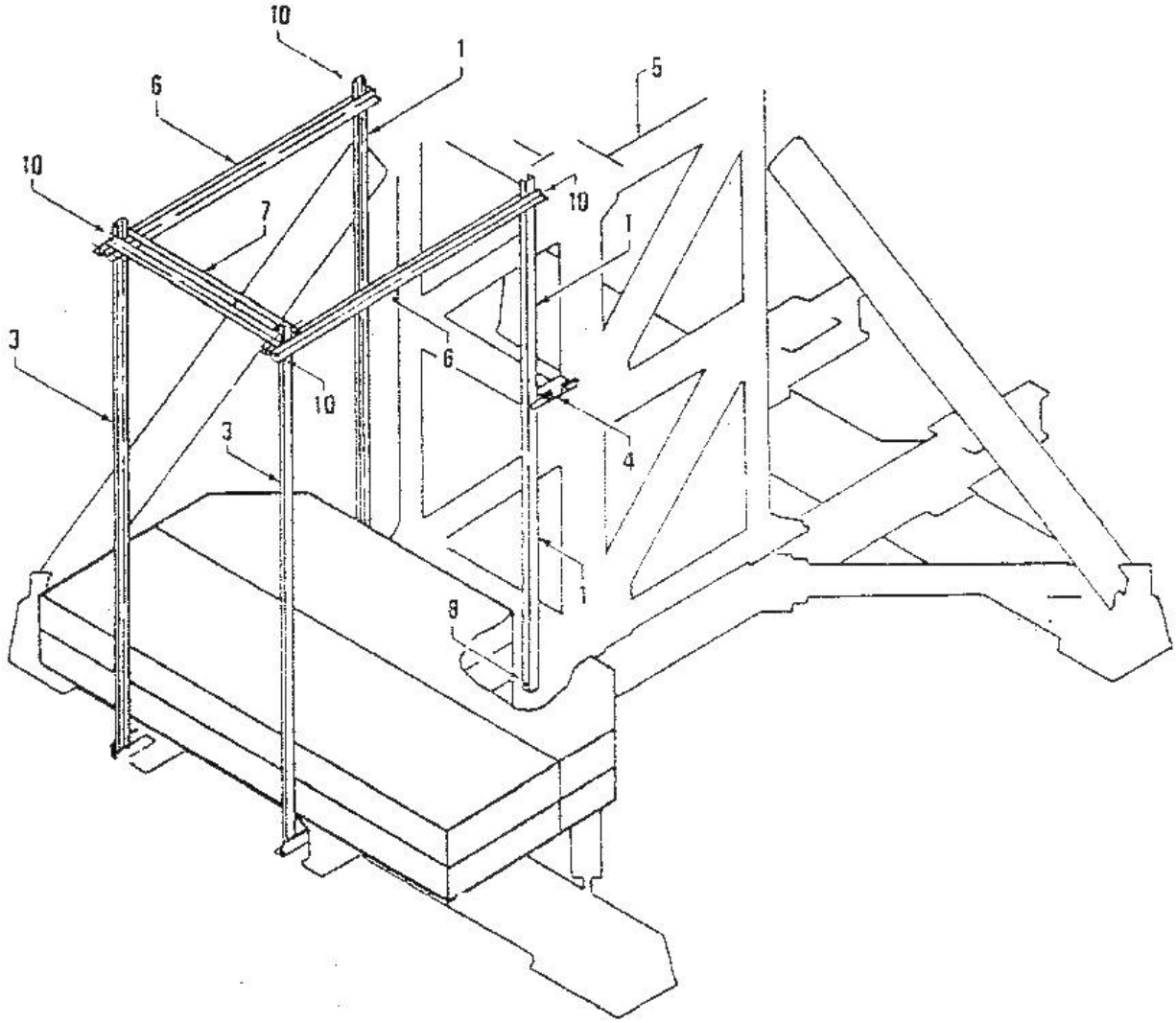

B The device comprises for each side

2 uprights (1) equipped with fastening plates(2);2 fastening plates(3) for the uprights (1) on the chassis (4);2 ropes (5);2 rope guide tubes (6);2 tensioning devices (7).

Fit uprights (1) onto the longitudinal member (2 shafts 20×40L,mark 8) and connect them with the basic mast unit by means of plates (3) using shafts (20×40L,make 9);split-pin. BALLAST.

Complete the device by fitting ropes (5) using 2 bulldog grips (10).Pass the ropes through tubes(6).Carry out a loop on the rope ends using 2 bulldog grips(11).Fit the tensioning devices on ropes (5),then on the longitudinal member. TIGHTEN.

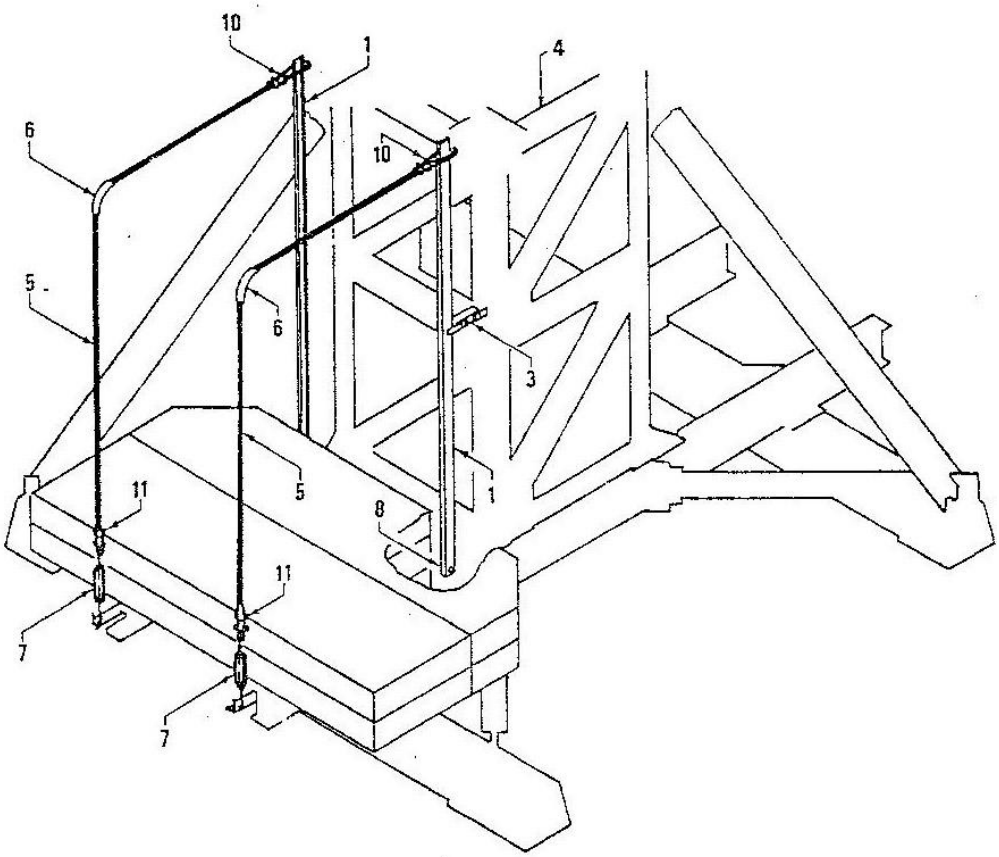

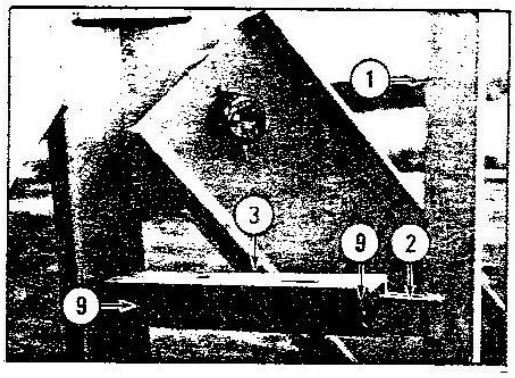

2.4 ERECTION STATIONARY CRANE

2.4.1、LOADS ON THE GROUND

The tables show the loads on the ground for the different crane configurations according to the height and to the jib range.

In-service and out-of-service base loadings consider the effects of the 2nd Order Theory and comprehend the static and dynamic uprated safety factors, as provided by the standards.

Overturning moment with out-of-service crane may have minus sign, when the counterweight effect prevails that of the wind blowing from the jib rear.

The data shown herein are applicable only to the specific crane configuration indicated. Do not interpolate or extrapolate the data.

Any variation from the prescribed and recommended data and specifications could result in defective foundations and damage to or possible collapse of the tower crane.

The contractor is responsible for damage caused by an uncorrectly prepared foundation or by neglecting the site conditions.

TWISTING MOMENT

The twisting moment concerns in-service crane (for out-of-service crane, twisting moment is always 0)

5023	
Jib	Twisting moment(Mt)
[m]	[kNm]
30-35	130
40	145
45-50	160

2.4.1.1、TOWER CONFIGURATION

2.4.1.1.1、Tower configuration

	L68B2	L46A1
A4	2.000m	1.6m
B4	7.500m	7.5m
C4	3.000m	3.0m
D4	7.260m	6.785m
E4	2.600m	2.166m
F4	4.050m	3.634m
G4	4.300m	3.605m
H4	1.180m	1.063m
I4	1.120m	0.984m

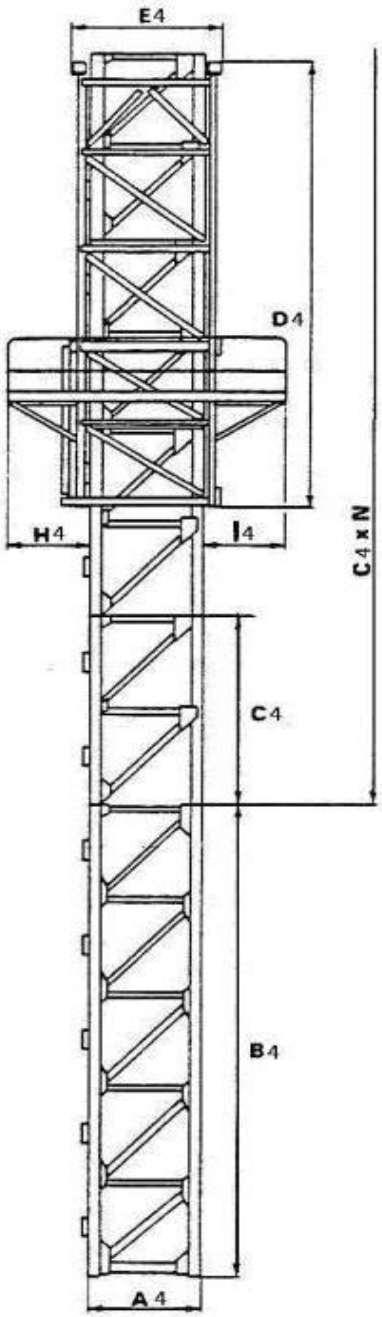

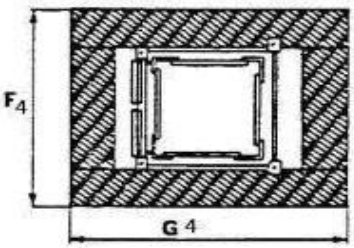

2.4.1.1.2、Base loadings

v =Axial load

M =Overturning moment

H =Horizontal thrust (force generated by wind in the direction shown)

R 1-R2 =Minimum/Maximum Loads on base supports

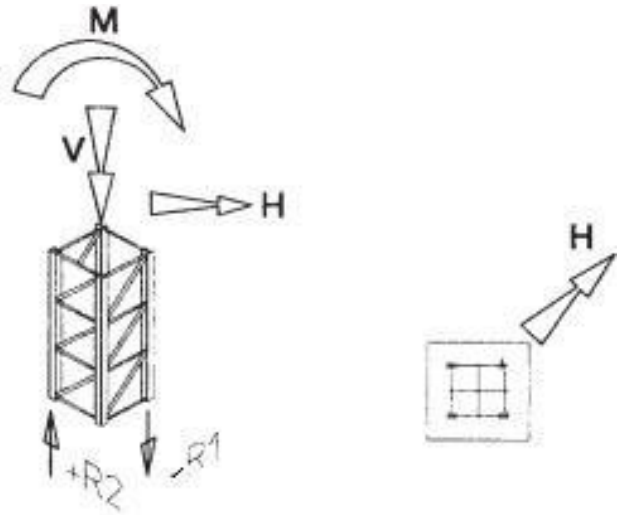

5023 L68B2			Jib 30m							
Tower height (m)	In service					Out of service				
	Tail wind Max. wind velocity:72km/h					Tail wind Max. wind velocity:151 km/h				
	H(kN)	V(kN)	M(kN.m)	R1(kN)	R2(kN)	H(kN)	V(kN)	M(kN.m)	R1(kN)	R2(kN)
49.65	36	-835	2042	-931	513	150	-725	4204	-1668	1305
46.65	34.7	-819	1737	-819	410	144.2	-709	2875	-1194	839
43.65	33.4	-803	1650	-784	383	138.4	-693	2502	-1058	711
40.65	32.1	-787	1568	-751	358	132.6	-677	2147	-928	590
37.65	30.8	-771	1489	-719	334	126.8	-661	1809	-805	474
34.65	29.5	-755	1413	-688	311	121	-645	1489	-688	365
31.65	28.2	-739	1342	-659	290	115.2	-629	1186	-577	262
28.65	26.9	-723	1276	-632	270	109.4	-613	901	-472	165
25.65	25.6	-707	1212	-605	252	103.6	-597	634	-373	75
22.65	24.3	-691	850	-473	128	97.8	-581	383	-281	-10
19.65	23.0	-675	848	-469	131	93.5	-565	151	-195	-88
16.65	21.7	-659	846	-464	134	89.2	-549	-64	-115	-160
13.65	20.4	-643	999	-514	193	84.9	-533	-261	-41	-226
10.65	19.1	-627	957	-495	182	80.6	-517	-441	27	-285

5023 L68B2	Jib 35m									
Tower height (m)	In service					Out of service				
	Tail wind Max. wind velocity:72km/h					Tail wind Max. wind velocity:151 km/h				
	H(kN)	V(kN)	M(kN.m)	R1(kN)	R2(kN)	H(kN)	V(kN)	M(kN.m)	R1(kN)	R2(kN)
46.65	30	-822	1846	-858	447	125	-712	3054	-1258	902
43.65	28.7	-806	1759	-823	420	119.2	-696	2681	-1122	774
40.65	27.4	-790	1677	-790	395	113.4	-680	2326	-992	652
37.65	26.1	-774	1598	-758	371	107.6	-664	1988	-869	537
34.65	24.8	-758	1622	-763	384	101.8	-648	1668	-752	428
31.65	23.5	-742	1451	-699	328	96	-632	1365	-641	325
28.65	22.2	-726	1385	-671	308	90.2	-616	1080	-536	228
25.65	20.9	-710	1321	-645	290	84.4	-600	813	-437	137
22.65	19.6	-694	1262	-620	273	78.6	-584	562	-345	53
19.65	18.3	-678	1207	-596	257	74.3	-568	330	-259	-25
16.65	17	-662	1156	-574	243	70	-552	115	-179	-97
13.65	15.7	-646	1108	-553	230	65.7	-536	-82	-105	-163
10.65	14.4	-630	1066	-534	219	61.4	-520	-262	-37	-223

5023 L68B2	Jib 40m									
Tower height (m)	In service					Out of service				
	Tail wind Max. wind velocity:72km/h					Tail wind Max. wind velocity:151 km/h				
	H(kN)	V(kN)	M(kN.m)	R1(kN)	R2(kN)	H(kN)	V(kN)	M(kN.m)	R1(kN)	R2(kN)
43.65	29	-813	1692	-802	395	119	-703	2900	-1201	850
40.65	27.7	-797	1610	-768	370	113.2	-687	2545	-1072	728
37.65	26.4	-781	1531	-736	346	107.4	-671	2207	-948	613
34.65	25.1	-765	1455	-706	323	101.6	-655	1887	-831	503
31.65	23.8	-749	1384	-677	302	95.8	-639	1584	-720	400
28.65	22.5	-733	1318	-649	283	90	-623	1299	-615	304
25.65	21.2	-717	1250	-621	263	84.2	-607	1032	-517	213
22.65	19.9	-701	1195	-598	247	78.4	-591	781	-424	128
19.65	18.6	-685	1140	-574	232	74.1	-575	549	-338	50
16.65	17.3	-669	1089	-552	218	69.8	-559	334	-258	-22
13.65	16	-653	1041	-531	205	65.5	-543	137	-184	-87
10.65	14.7	-637	999	-512	194	61.2	-527	-43	-117	-147

5023 L68B2	Jib 45m									
Tower height (m)	In service					Out of service				
	Tail wind Max. wind velocity:72km/h					Tail wind Max. wind velocity:151 km/h				
	H(kN)	V(kN)	M(kN.m)	R1(kN)	R2(kN)	H(kN)	V(kN)	M(kN.m)	R1(kN)	R2(kN)
40.65	28	-802	1620	-773	372	113	-692	2775	-1154	808
37.65	26.7	-786	1541	-741	348	107.2	-676	2437	-1031	693
34.65	25.4	-770	1465	-711	326	101.4	-660	2117	-913	583
31.65	24.1	-754	1394	-681	304	95.6	-644	1814	-802	480
28.65	22.8	-738	1328	-654	285	89.8	-628	1529	-698	384
25.65	21.5	-722	1264	-628	267	84	-612	1262	-599	293
22.65	20.2	-706	1205	-603	250	78.2	-596	1011	-506	208
19.65	18.9	-690	1150	-579	234	73.9	-580	779	-420	130
16.65	17.6	-674	1099	-557	220	69.6	-564	564	-340	58
13.65	16.3	-658	1051	-536	207	65.3	-548	367	-267	-7
10.65	15	-642	1009	-517	196	61	-532	187	-199	-67

5023 L68B2	Jib 50m									
Tower height (m)	In service					Out of service				
	Tail wind Max. wind velocity:72km/h					Tail wind Max. wind velocity:151 km/h				
	H(kN)	V(kN)	M(kN.m)	R1(kN)	R2(kN)	H(kN)	V(kN)	M(kN.m)	R1(kN)	R2(kN)
40.65	28	-751	1676	-780	405	113	-696	3029	-1245	897
37.65	26.7	-735	1597	-748	381	107.2	-680	2691	-1121	781
34.65	25.4	-719	1521	-718	358	101.4	-664	2371	-1004	672
31.65	24.1	-703	1450	-688	337	95.6	-648	2068	-893	569
28.65	22.8	-687	1384	-661	317	89.8	-632	1783	-788	472
25.65	21.5	-671	1320	-635	299	84	-616	1516	-690	382
22.65	20.2	-655	1261	-610	282	78.2	-600	1265	-597	297
19.65	18.9	-639	1206	-586	267	73.9	-584	1033	-511	219
16.65	17.6	-623	1155	-564	252	69.6	-568	818	-431	147
13.65	16.3	-607	1107	-543	240	65.3	-552	621	-358	82
10.65	15	-591	1065	-524	229	61	-536	441	-290	22

2.4.1.1.2、L46A1 Base loading

5023 L46A1	Jib 30m									
Tower height (m)	In service					Out of service				
	Tail wind Max. wind velocity:72 km/h					Tail wind Max. wind velocity:151 km/h				
	H(kN)	V(kN)	M(kN.m)	R1(kN)	R2(kN)	H(kN)	V(kN)	M(kN.m)	R1(kN)	R2(kN)
31.65	26.8	-703.5	1277.6	-626.7	276.1	109.7	-598.8	1129.1	-549.3	249.4
28.65	25.6	-689.0	1216.0	-601.7	257.3	104.3	-584.2	858.7	-449.8	157.2
25.65	24.4	-674.5	1156.2	-576.6	240.4	98.8	-569.5	604.8	-355.8	71.6
22.65	23.2	-659.9	811.8	-451.2	122.2	93.4	-554.9	365.8	-268.4	-9.6
19.65	22.0	-645.3	810.7	-447.9	125.2	89.4	-540.1	144.4	-186.4	-84.1
16.65	20.8	-630.7	809.6	-443.6	128.2	85.4	-525.4	-61.2	-110.1	-153.1
13.65	19.5	-616.0	957.0	-491.9	184.9	81.3	-510.6	-250.0	-39.3	-216.5
10.65	18.3	-601.3	917.8	-474.2	174.5	77.3	-495.8	-422.9	25.9	-273.3

5023 L46A1	Jib 35m									
Tower height (m)	In service					Out of service				
	Tail wind Max. wind velocity:72 km/h					Tail wind Max. wind velocity:151 km/h				
	H(kN)	V(kN)	M(kN.m)	R1(kN)	R2(kN)	H(kN)	V(kN)	M(kN.m)	R1(kN)	R2(kN)
28.65	21.1	-690.4	1317.1	-637.5	292.9	85.8	-585.8	1027.1	-509.7	216.8
25.65	19.9	-675.9	1257.6	-613.4	276.1	80.3	-571.2	774.0	-416.0	130.4
22.65	18.7	-661.4	1202.7	-590.2	260.2	74.9	-556.6	535.6	-328.8	50.5
19.65	17.5	-646.8	1151.5	-568.0	245.2	70.9	-541.9	314.8	-247.1	-23.9
16.65	16.2	-632.2	1104.0	-547.6	232.1	66.9	-527.2	109.8	-170.9	-92.6
13.65	15.0	-617.6	1059.2	-528.1	219.9	62.8	-512.4	-78.4	-100.4	-155.8
10.65	13.8	-602.9	1020.2	-510.5	209.6	58.8	-497.6	-250.7	-35.4	-213.4

5023 L46A1	Jib 40m									
Tower height (m)	In service					Out of service				
	Tail wind Max. wind velocity:72 km/h					Tail wind Max. wind velocity:151 km/h				
	H(kN)	V(kN)	M(kN.m)	R1(kN)	R2(kN)	H(kN)	V(kN)	M(kN.m)	R1(kN)	R2(kN)
28.65	21.4	-697.1	1253.4	-616.6	269.1	85.6	-592.5	1235.3	-584.9	289.1
25.65	20.2	-682.6	1190.0	-590.6	250.4	80.2	-577.9	982.5	-492.2	202.8
22.65	19.0	-668.1	1138.8	-569.3	235.4	74.7	-563.2	744.3	-404.1	122.0
19.65	17.7	-653.5	1087.6	-547.0	221.3	70.7	-548.6	523.7	-322.5	47.7
16.65	16.5	-638.9	1040.0	-526.6	208.2	66.7	-533.8	319.0	-246.4	-21.0
13.65	15.3	-624.3	995.2	-507.1	196.0	62.6	-519.1	131.0	-175.9	-83.2
10.65	14.1	-609.6	956.0	-489.5	185.7	58.6	-504.3	-41.2	-112.0	-140.7

5023 L46A1	Jib 45m									
Tower height (m))	In service					Out of service				
	Tail wind Max. wind velocity:72 km/h					Tail wind Max. wind velocity:151 km/h				
	H(kN)	V(kN)	M(kN.m)	R1(kN)	R2(kN)	H(kN)	V(kN)	M(kN.m)	R1(kN)	R2(kN)
25.65	20.5	-687.3	1203.3	-596.6	254.2	80.0	-582.6	1201.4	-570.2	278.9
22.65	19.3	-672.8	1148.4	-574.1	238.3	74.5	-568.0	963.5	-482.2	198.2
19.65	18.0	-658.3	1097.1	-551.8	223.2	70.5	-553.3	743.2	-400.7	124.0
16.65	16.8	-643.7	1049.5	-531.4	210.1	66.5	-538.6	538.6	-324.7	55.4
13.65	15.6	-629.0	1004.8	-511.9	197.9	62.4	-523.9	350.9	-255.3	-6.7
10.65	14.4	-614.4	965.6	-494.3	187.6	58.4	-509.1	179.0	-190.4	-64.1

5023 L461	Jib 50m									
Tower height (m)	In service					Out of service				
	Tail wind Max. wind velocity:72 km/h					Tail wind Max. wind velocity:151 km/h				
	H(kN)	V(kN)	M(kN.m)	R1(kN)	R2(kN)	H(kN)	V(kN)	M(kN.m)	R1(kN)	R2(kN)
25.65	20.5	-638.8	1256.6	-603.3	284.6	80.0	-586.4	1443.2	-656.9	363.7
22.65	19.3	-624.2	1201.7	-580.7	268.7	74.5	-571.8	1205.5	-568.9	283.0
19.65	18.0	-609.6	1150.5	-558.5	254.7	70.5	-557.1	985.5	-487.5	208.9
16.65	16.8	-595.0	1103.0	-538.1	240.7	66.5	-542.4	781.2	-411.6	140.4
13.65	15.6	-580.3	1058.3	-518.6	229.4	62.4	-527.7	593.7	-342.2	78.4
10.65	14.4	-565.6	1019.2	-500.9	219.2	58.4	-513.0	422.0	-277.5	21.1

2.4.2、INSTALLATION

Jarlway just provides some general requirements concerning the dimensions of the supports.

The actual dimensions shall be calculated by the customer according to the loads transmitted by the crane on the supports and the bearing capacity of the ground.

2.4.2.1、PREPARING THE CONCRETE FOUNDATION

The dimensions of the concrete foundation must be calculated by the designer engineer responsible for the concrete works, who shall refer to the load values indicated in the tables and to the ground resistance values measured.

2.4.2.1.1、Concrete foundation size

The design dimensions given for the concrete foundation satisfy the standards stabilityrequirements.They prevent the crane from overturning, regardless of the ground own resistance.

2.4.2.1.1.1、Installation Concrete foundation

For heights other than the design one, consult the Manufacturer.

Explanation and symbols

Designation of a concrete block (M81N)

M :Concrete block

81N :Weight of the concrete block in tons.

The reinforcement of a concrete block is composed of an upper and a lower connected

by pins. Each layer conprises two crossed beds.

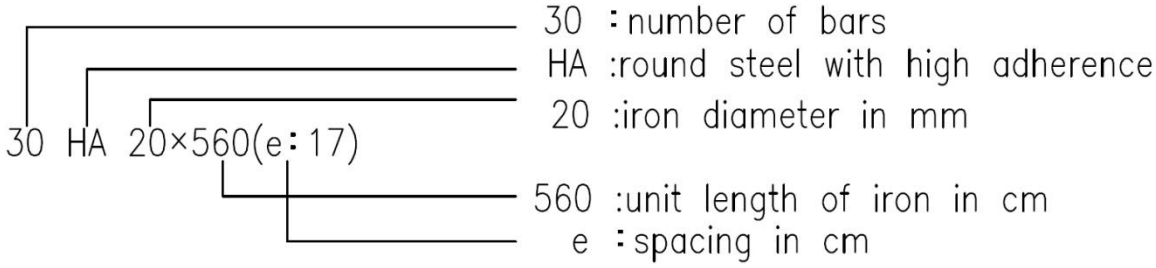

Lower bed

Ep:pin D :density V :volune in m3 L:length I :width H:height in cm

Concrete mixed for 350kg/m3--Quality of cement:425 or equivalent

M205N

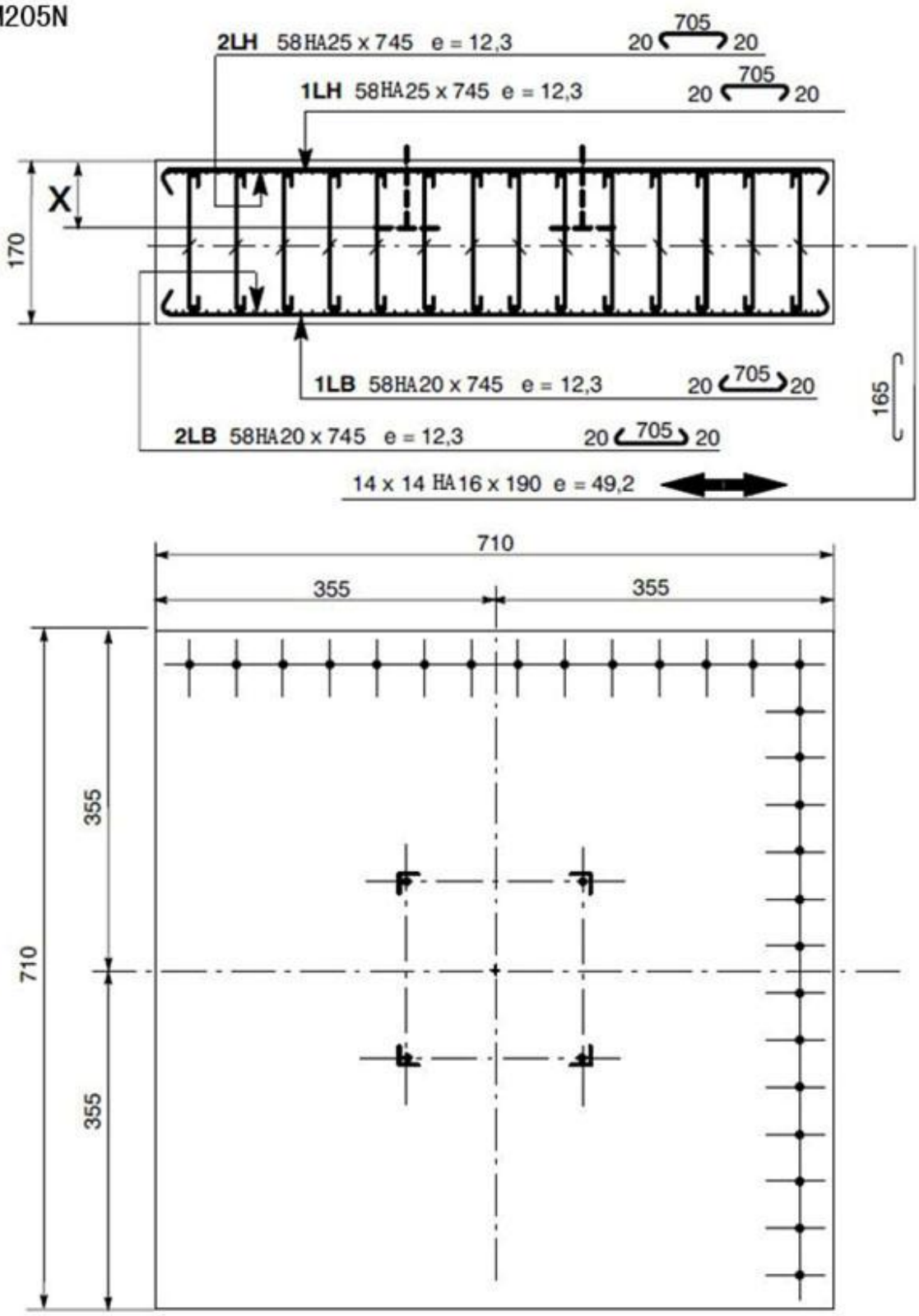

D: 2,4 L : 710 l : 710 h : 170 V : 85 m^3

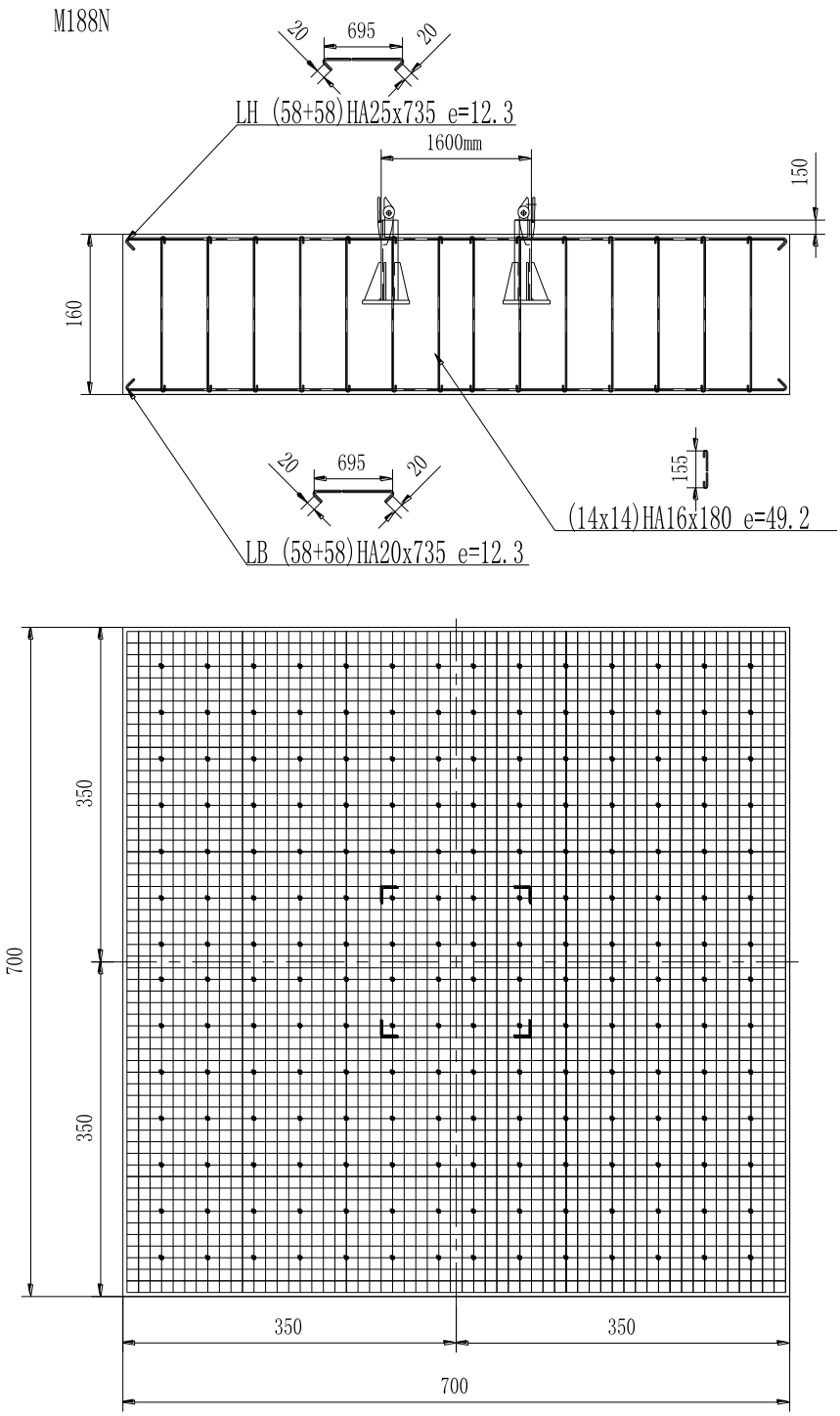

2.4.2.2、Fitting the fixing angles L68B2

2.4.2.2.1、Installation

2.4.2.2.1.1、Recuperable foundation plates

After excavating the foundation pit and assembling the reinforcement mesh cage of the footing,position as many anchor bolts.

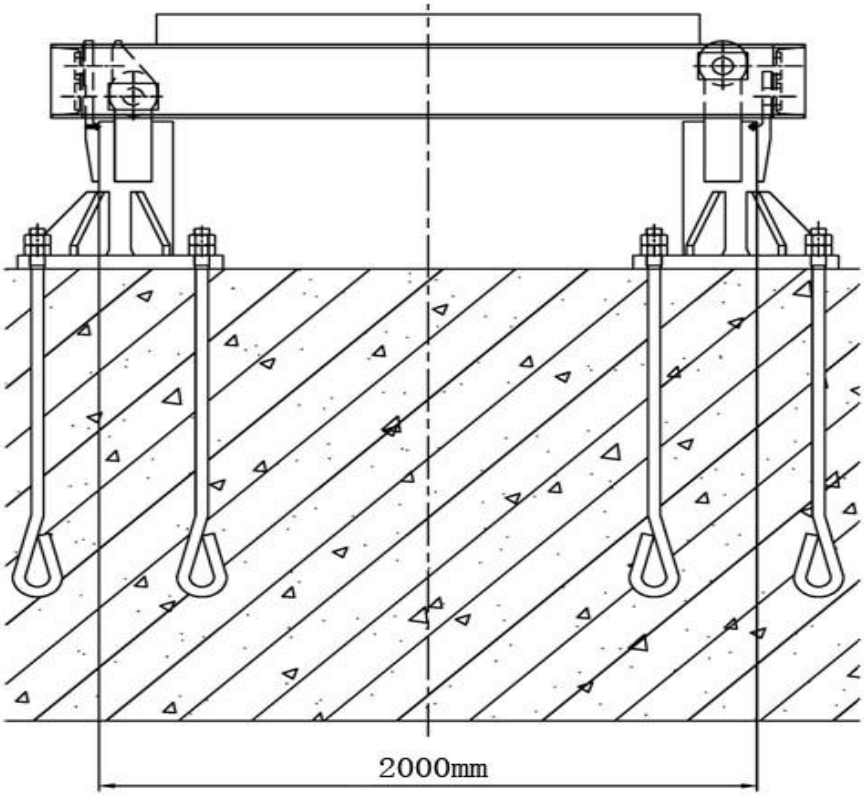

For a correct level and plumb installation of the anchor pin use the four base plates(1) and the special jig frame(2) which shall be properly bolt-connected on the base plates themselves.

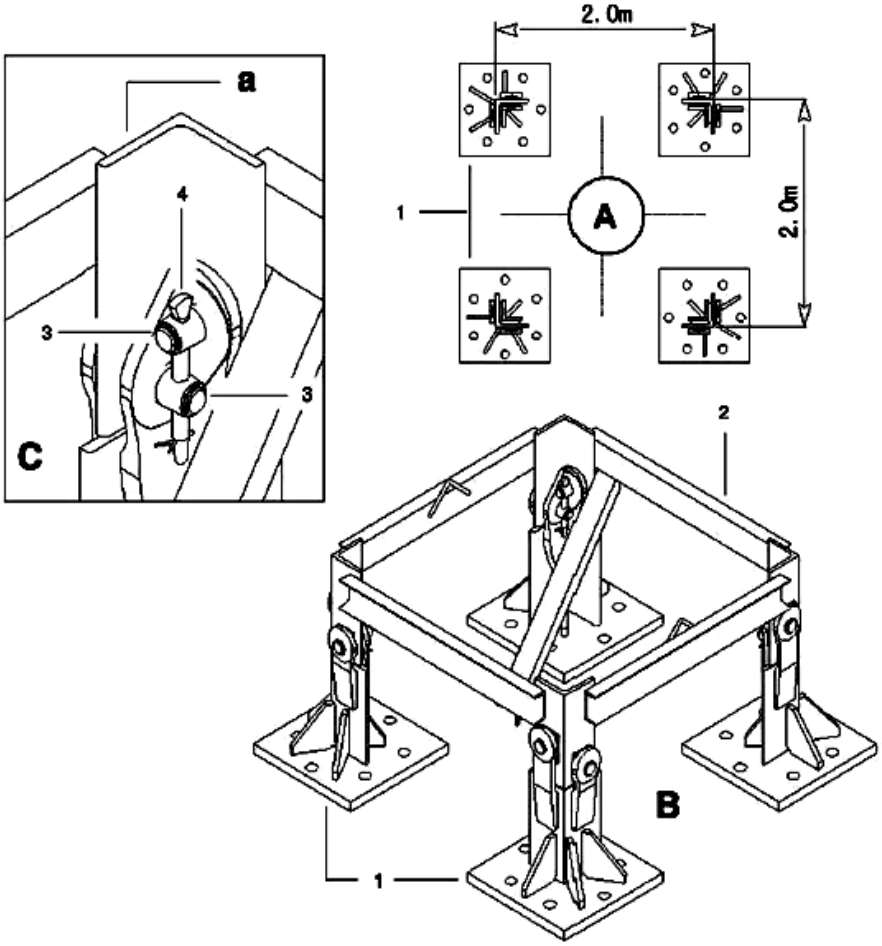

Placing the anchor bolts

Screw down flat nut (1) on the anchor bolt until there is suitable clearance between the base plate bottom and the anchor bolt head (picture 2.2.3).

Place the anchor bolt in the hole of the plate.

Position washer (3) and screw tall nut (2).

Now the anchor bolts stay at right angle about the surface of the base plate.

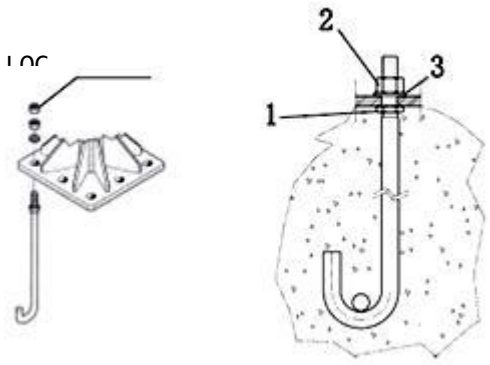

Picture2.2.3

Dimensions are expressed in millimetres

Connect the anchor bolts with the steel iron bars (pictures 2.2.4 and 2.2.5).

Weld or connect the anchor bolts to the reinforcement mesh cage.

Remove the shims used for leveling.

Check the base plates for proper level.

WARNING:

Tower should be installed level to a tolerance of 1:500

In case of deviation from the above value, contact Jarlway After Sales Service

Secure nuts with lock nuts, thus preventing them from loosening (picture 2.2.6).

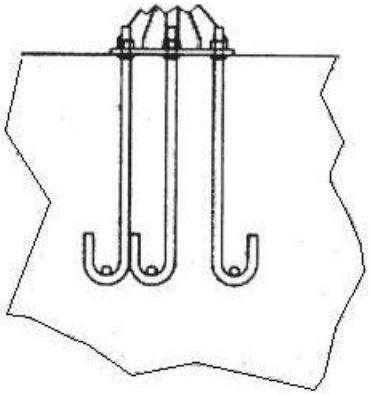

Picture 2.2.4

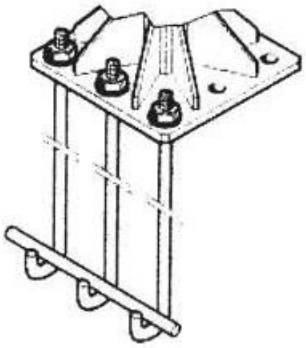

Picture 2.2.5

To correct any leveling error, rotate nuts (1) and (2) (picture 2.2.6).

Pour the concrete.

Inspect the concrete three days after pouring and, if necessary, use high-resistance concrete for the final leveling of the base plates (picture 2.2.6).

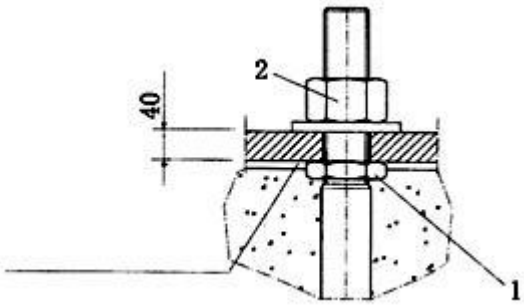

Picture 2.2.6

Final leveling

To correct any leveling error, remove the lock nuts and tall nuts. Then place shims where necessary.

Screw tall nuts down to the plate without tightening them firmly.

Fill the empty spaces between the concrete slab and the base plates with high-resistance concrete.

On completing the crane erection, screw the tall nuts firmly and secure them with lock nuts.

Torque wrench setting for anchor bolts is 1450 Nm

CAUTION：

Be sure that, once completed the crane erection and during the crane whole working period, the part of the anchor bolts jutting out of the concretefoundation is always clean from deposits, earth foundation is always clean from deposits, earth.

2.4.2.2.1.2、Expendable foundation anchors

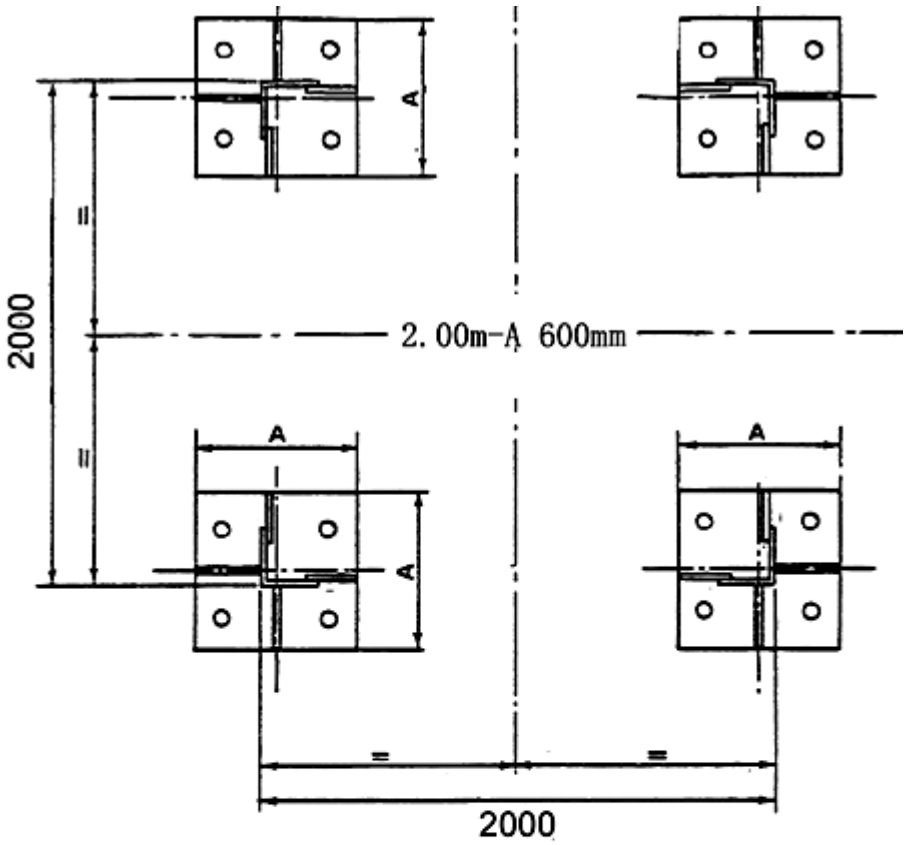

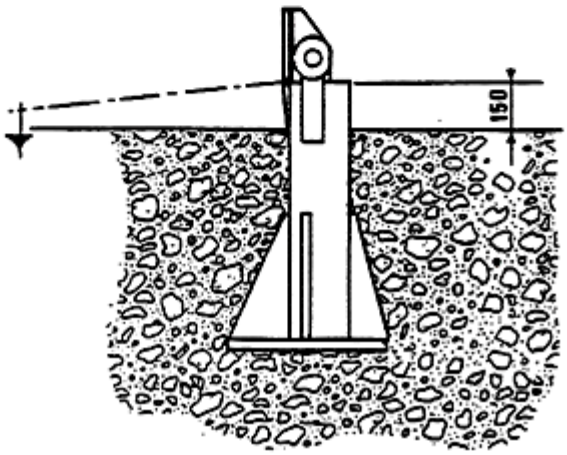

To the right of a fixing angle. neither cut nor reduce the given amount of reinforcing irons.

2.4.3.3、Fitting the fixing angles

The material necessary to perfectly anchor the fixing-angles comprises;

4 fixing-angles and 8 pins

1 standard mast section

a plumb line or sighting device

Assemble the fixing-angles with the mast.

Position the fixing-angle/mast assembly in the reinforcement and adjust it by wedging under the angle support plates

Fit the standard mast section on the fixing-angle and check perpendicularity in both directions.

Pour the concrete block and wait until it is completely dry before unfitting the mast section.

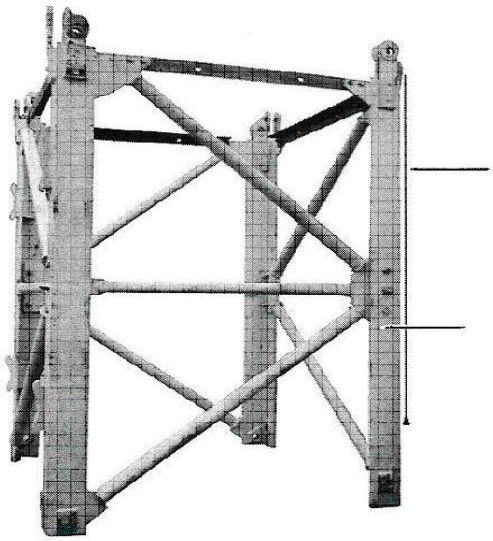

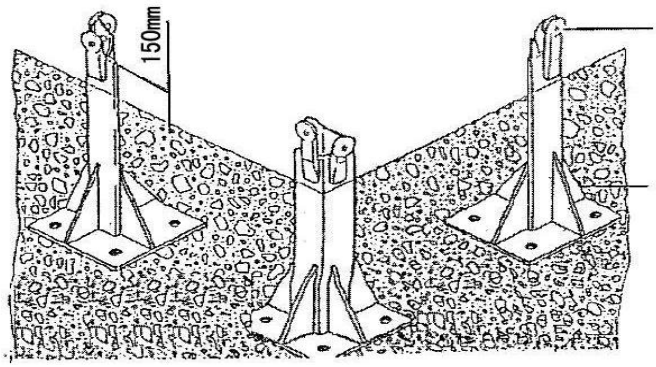

2.4.2.3、Fitting the fixing angles L46A1

The main process of fitting the fixing angeles L46A1 is similar with the process of fitting the fixing

angeles L68B1, follows are some pictures and dimensions.

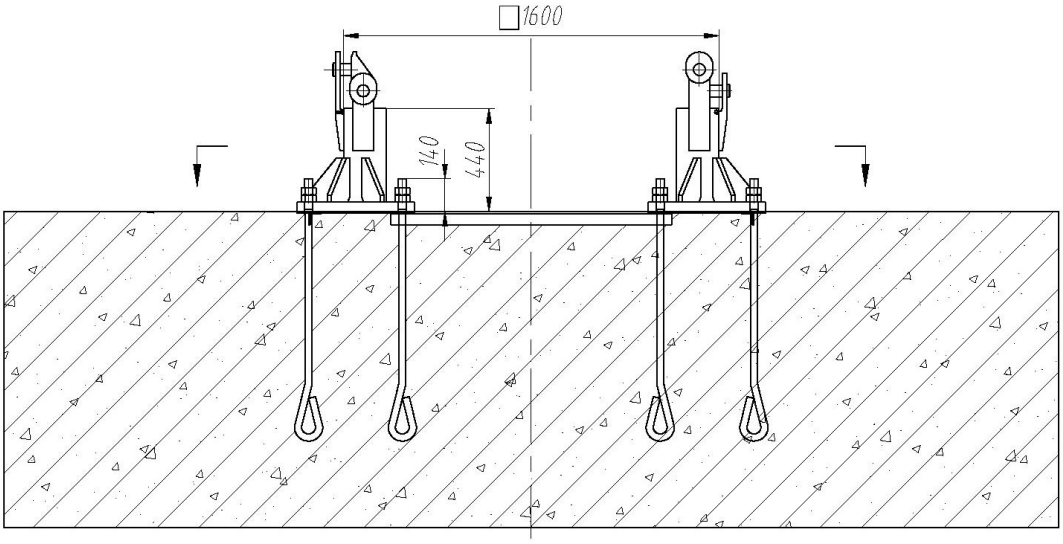

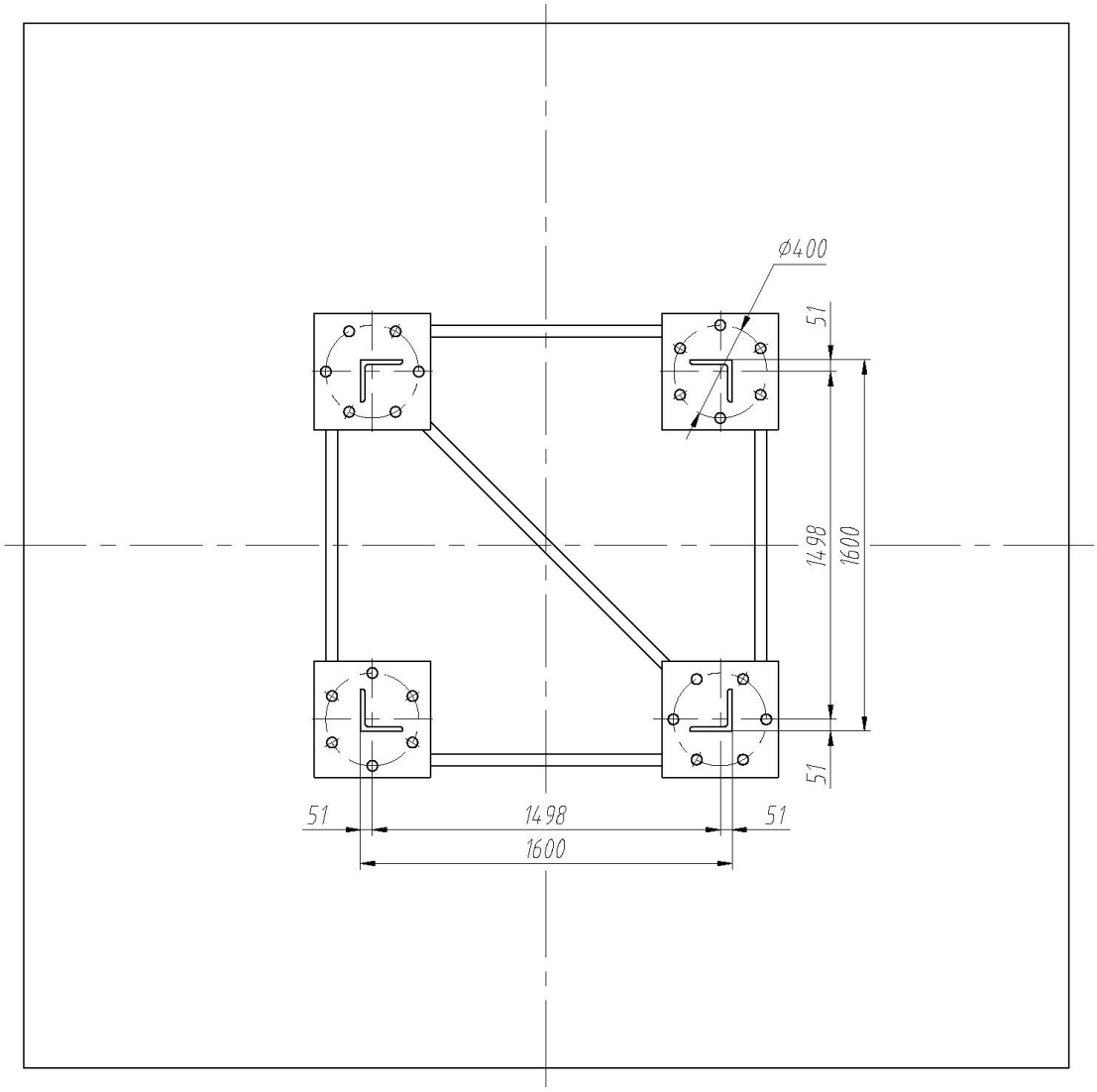

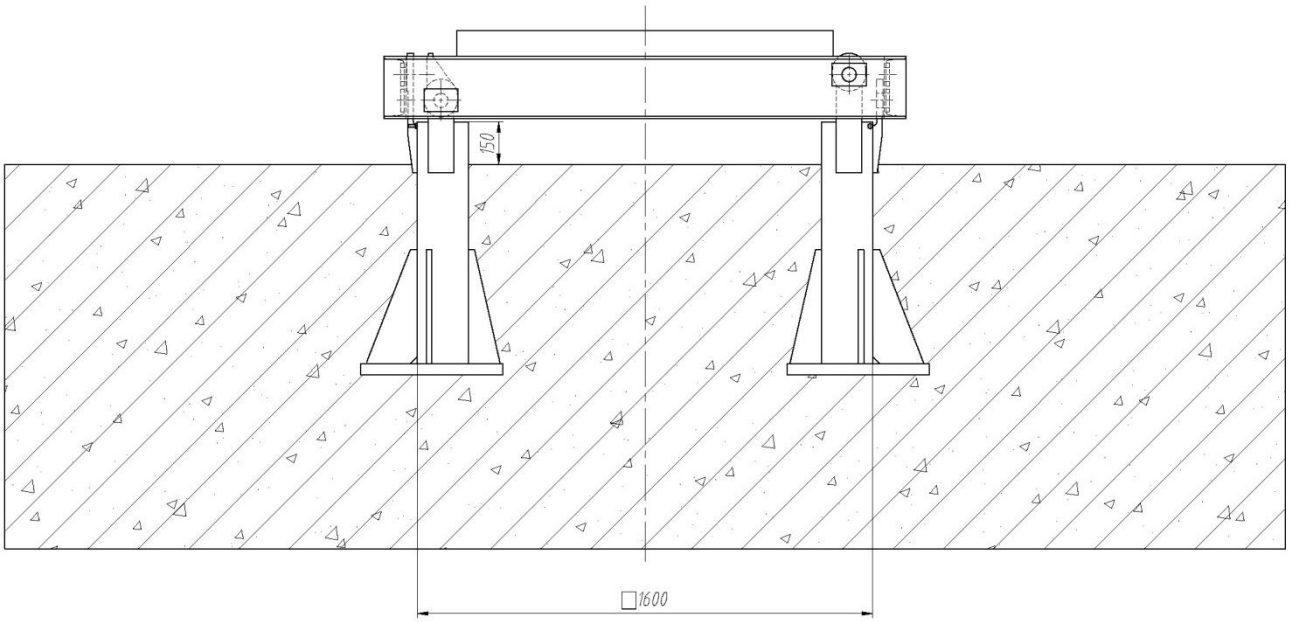
150
□1600

3.ERECTION

3.1、ERECTION SEQUENCES

3.1.1、INTRODUCTION

This erection procedure allows to rapidly assemble your crane until it reaches its telescoping position.

It requires an auxiliary mobile crane, the characteristics of which must correspond to the parts to be handled.

Reducing to a minimum time of the auxiliary crane used on site involves a good coordination between the erection and assembling area.

This erection procedure needs no electrical power up to the moment the telescoping sequence starts.

The object of this brochure is to make you well acquainted with all the erection operations which are separately dealt with and detailed in small specialized brochures.

3.1.2、GENERAL INSTRUCTIONS FOR ERECTION

1. All the handling operations using the lorry mounted crane must be carried out safely. For this:

Properly pack up the crane

Do not overload the crane

Use slings in good order and of correct lengths according to the weights of the parts to be lifted

Respect the slinging points.

2. The erection operations must be carried out in the order listed.

3. Make sure that protection and safety means are fitted and used, such as: ladders、platforms、guard-rails、safety rope etc.

4. It is absolutely forbidden to lift a load if the counter-jib ballast is not fitted.

5. The crane must not be telescoped up with a wind exceeding 60km/h.

6. Before starting any telescoping operation, make sure that the pins connecting the tower head to the telescopic cage are inserted and secured by split-pins.

7. It is essential that the amounts of counter-jib ballast indicated according to the jib lengths are respected(see corresponding brochure).

8. For telescoping, always slew the jib opening of the telescoping cage (the side where the masts are introduced).

9. The mast sections must be lifted (or lowered) as close as possible to the tower.

10. It is forbidden to slew the jib, operate the jib trolley and use the load hook (hoisting or lowering) as long as the telescopic cage is lifted or being lifted.

These instructions also apply to :

the erection

the height increase of the crane

the dismantling

For any particular problem as to the erection organization or other difficulty, do not hesitate to call upon the assistance of our After-Sales Service.

3.2、MOUNTING THE BASIC MAST

3.2.1、DESCRIPTION-WEIGHTS

The basic mast assembly comprises:

a telescopic cage(1) equipped with its cat-walks(2).

a basic mast(3)

a telescoping yoke(4)

a hydraulic cylinder(5)

The table on the next page gives the weight of the main components.

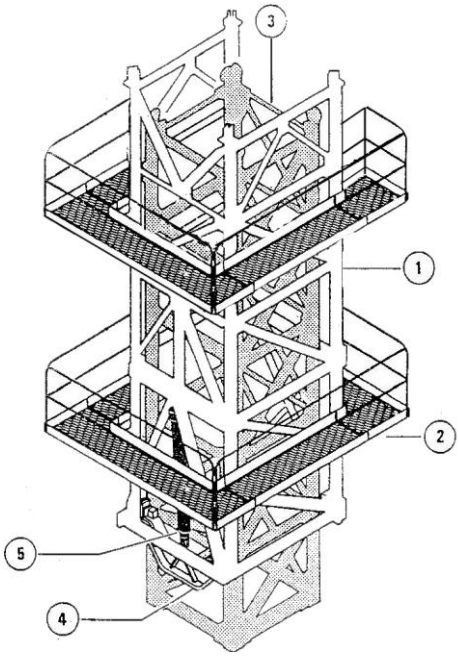

Rep	Nb	Weights (kg)	Weights (kg)
		2m (H)	1.6m (H)
1	1	4900	1988
2	7	770	788
3	1	3945	2532
4	1	480	244
5	1	330	350

3.2.2、PREPARING THE BASIC MAST ON THE GROUND

Check that the basic mast is equipped with the telescoping yoke and the cylinder. Otherwise, place the cylinder, piston rod downwards between the cage and the basic mast and pin it onto the telescopic cage. Position the telescoping yoke and pin it onto the cylinder.

Fit slings onto the basic mast as shown in fig. A, tighten the slings and put the basic mast upright.

Get hold of the packages of cat-walks and grabs rails.

Pin the cat-walk supports (1) at (2) onto the cage using 25×60C shafts.

See fig. B concerning the positioning of the cage by means of 25×60C shafts.

Mount the grab rails(5) and split-pin them at(6).

Assemble the grab rails together by means of the fixing brackets (7).

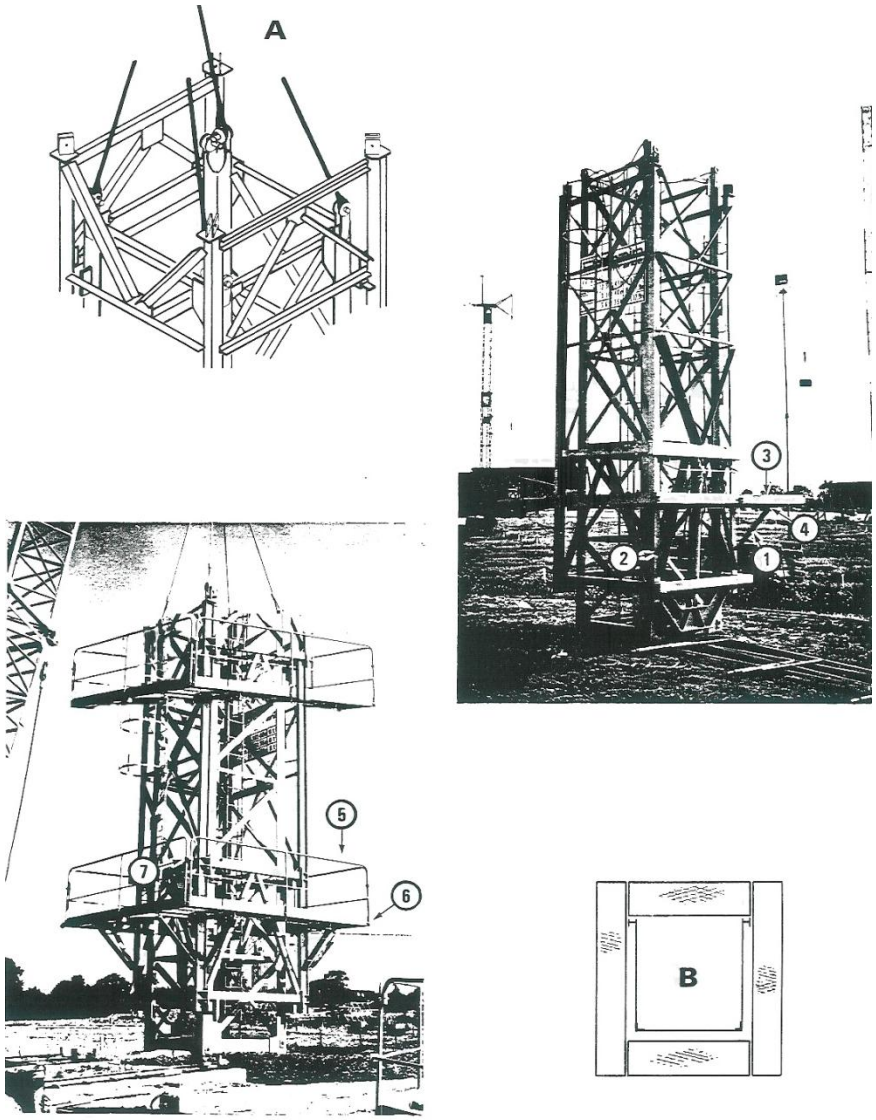

Engage the 3. 60m ladders (1) into the 1.50m ladders (2) and mount the assembly using ladder fittings (3)、fixing brackets (4)、wedges (5) and pins (6).

The towerhead access, whilst telescoping, is ensured by a ladder located inside the towerhead.

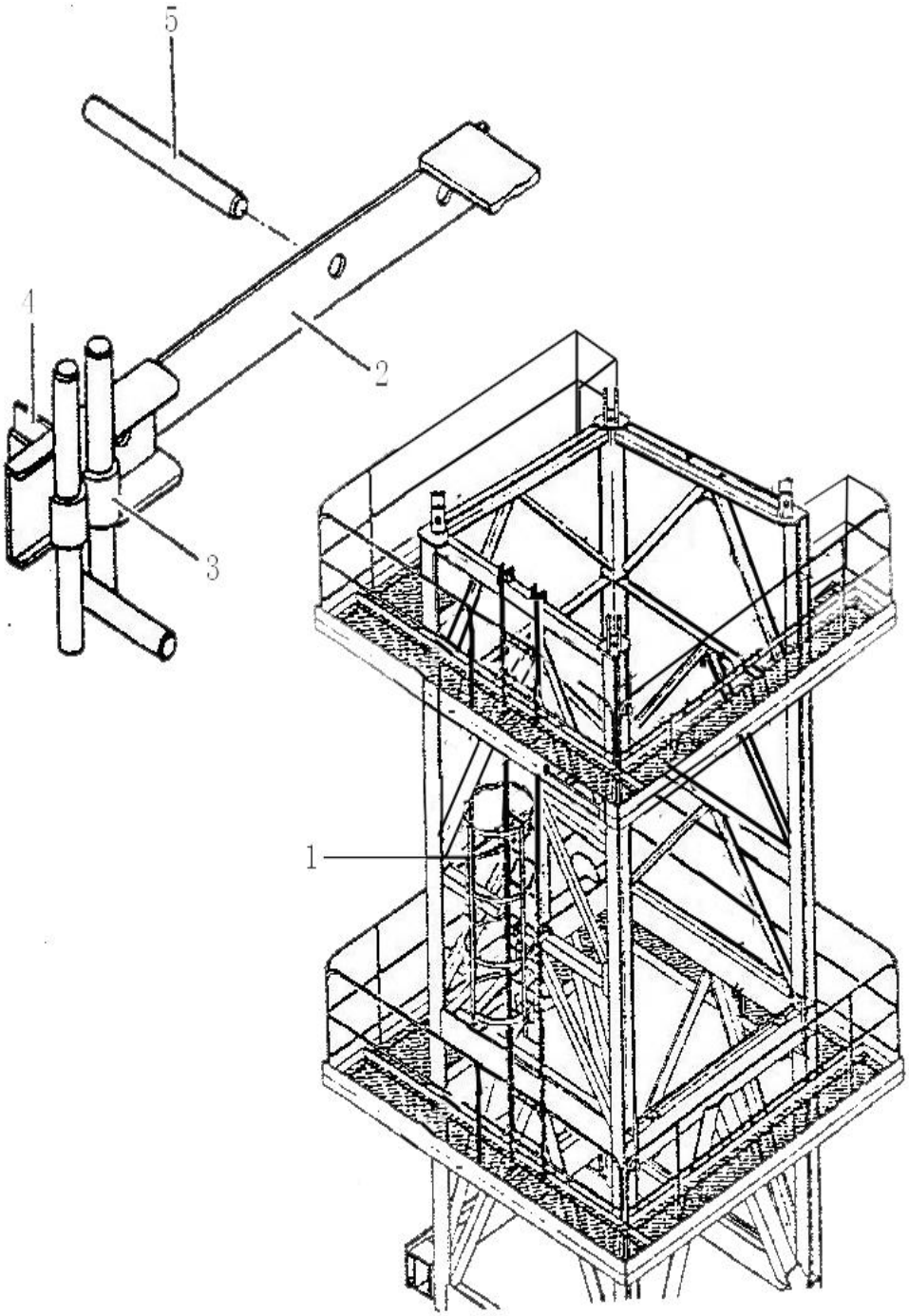

3.2.3、FITTING THE BASIC MAST

Onto the chassis：

Lift up the basic mast and check that the fishplating surfaces and the pin holes are clean, then position it onto the basic mast unit.

In order to guide the basic mast. Take all precautions thus ensuring a maximum degree of safety for the personnel (from the ground, using cords, and finally,in order to introduce it into the fishplates from the top of the base ballast).

Fit the assembly at (1) using 4 X 2 pins (2) secured by a locking pin (3).

Position the support (4) under the basic mast ladder and set it up onto the chassis platform.

Onto fixing-angles:

Insert the basic mast right into the fixing angles

(AND NEVER INTO THE FRAME USED TO POSITION THE FIXING-ANGLES INTO THE ANCHORAGE PAD).

Pin-connect the basic mast with the fixing-angles by means of 4X 2 pins (2) secured by a locking pin (3).

Position the support Pate (4) under the basic mast ladder and prop it up (by means of bond stones or others) onto the concrete pad.

	2m	1.6m
2	φ 65	φ 55
3	φ 20	Φ 20

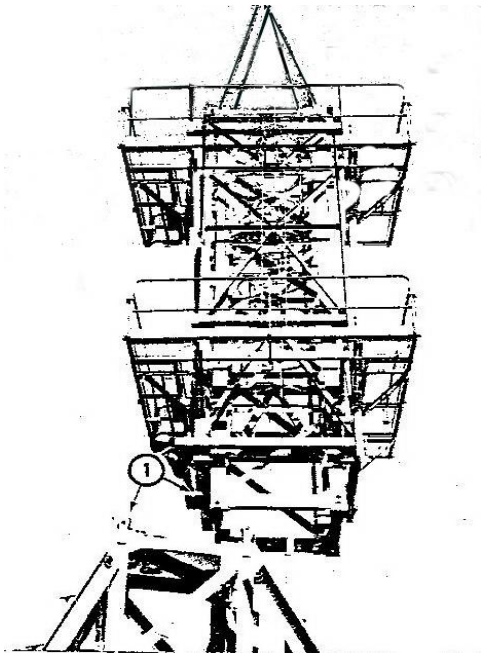

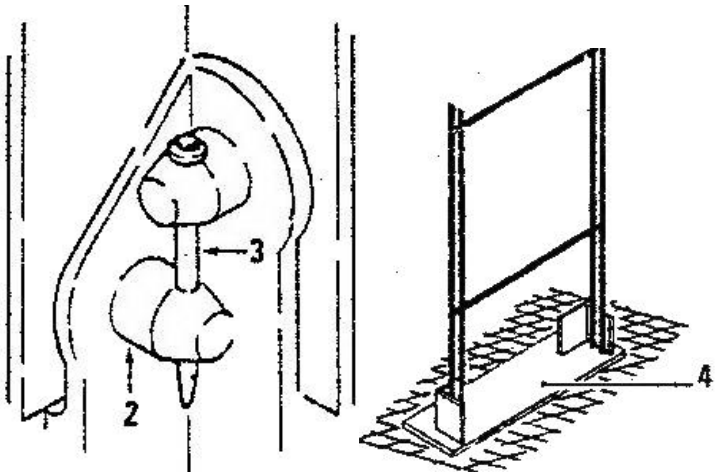

3.3、SLEWING RING INSTALLTION

3.3.1、SLEWING RING COMPONENTS

	DESCRIPTION	LENGTH	QTY	WEIGHT
	COMPLETE SLEWING UNIT (SLEWING RING SUPPORT + CAB PLATFORM +	4.0m	1	7260
		WIDTH		
		3.6m		
		HEIGHT		

	CAB + QEG)	3.3m		
	DESCRIPTION	LENGTH	QTY	WEIGHT
	SLEWING RING SUPPORT	2.4m	1	6033
		WIDTH		
		2.4m		
		HEIGHT		
		2.2m		
	DESCRIPTION	LENGTH	QTY	WEIGHT
	SLEWING RING SUPPORT (STEEL STRUCTURAL WORKS + SLEWING UNIT)	2.4m	1	5833
		WIDTH		
		2.4m		
		HEIGHT		
		1.8m		

	DESCRIPTION	LENGTH	QTY	WEIGHT
	CAB SUPPORT PLATFORM + CAB + QEG	3.5m WIDTH 1.5m HEIGHT 2.5m	1	1130kg
	PLATFORM-DX (RIGHT) FOR UPPER SLEWING RING SUPPORT (with handrails)	2.13m WIDTH 0.92m HEIGHT 1.32m	1	97kg

3.3.2、SLEWING RING SPARE PARTS

Slewing Ring

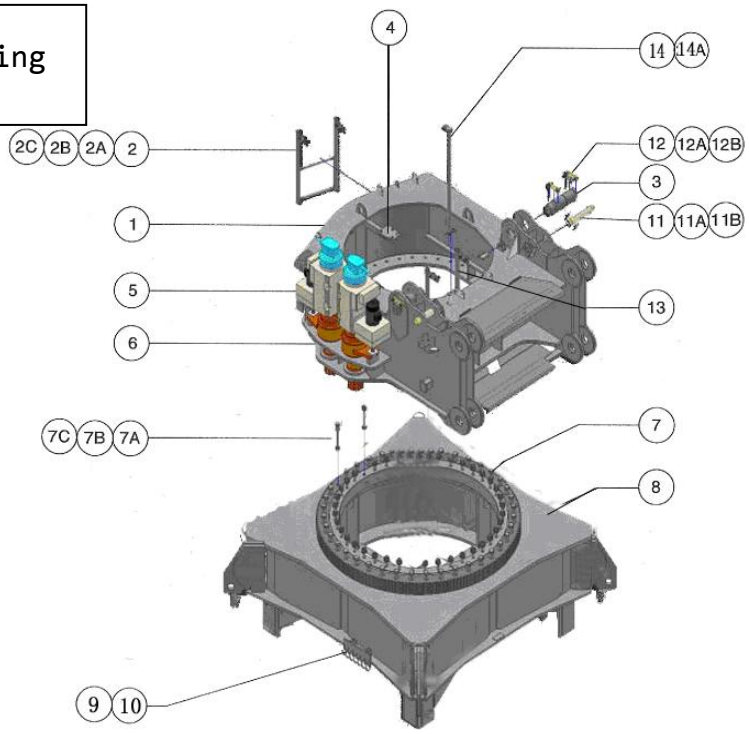

No	Code	Qty	Description & Specification	Remark
			Slewing Ring	
1		1	Upper slewing ring	
2		1	Ladder	
2a		4	Screw M14x40 cl.8.8	
2b		4	Tall nut M14 cl.6s	
2c		4	Washer M14	
3		2	Pin Φ100x220	
4		1	Slip ring support	
5		2	Motor	
6		2	Reduction gear	
7		1	Slewing ring	
7a		80	Screw M27x200 cl.10.9	
7b		80	Tall nut M27 cl.10	
7c		160	Washer M27	
8		1	Lower slewing ring	
9		1	Bracket	
10		1	Electric wire support	
11		2	Pin Φ55x240	
11a		2	Pin Φ16x120	
11b		4	Spring split pin	
12		4	Pin lock plate	
12a		5	Screw M16x45	
12b		5	Washer M16	
13		1	Ladder	
14		1	Pole	
14a		1	Spring split pin	

PLATFORM UPPER SLEWING RING SUPPORT

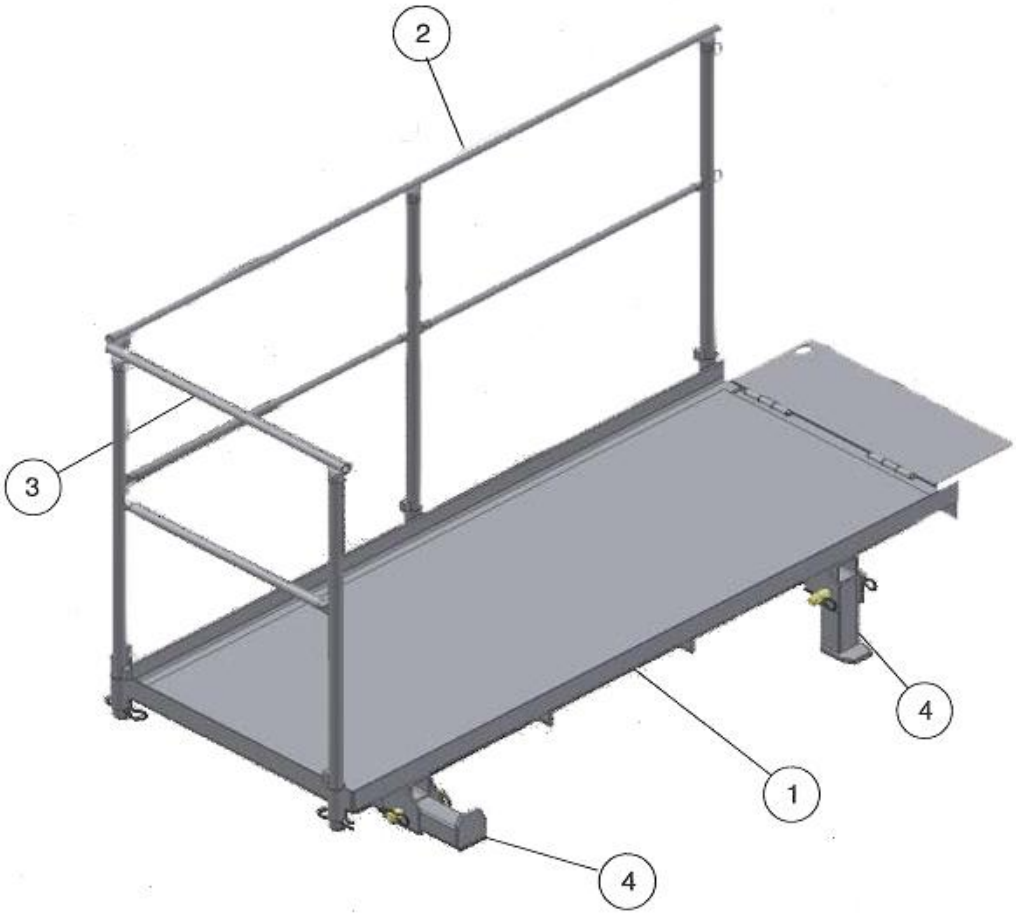

No	Code	Qty	Description & Specification	Remark
			PLATFORM UPPER SLEWING RING SUPPORT	
1		1	Platform	
2		1	Safety rail	
3		2	Safety rail	
4		2	Ladder	

CABIN AND QEG SUPPORT PLATFORM

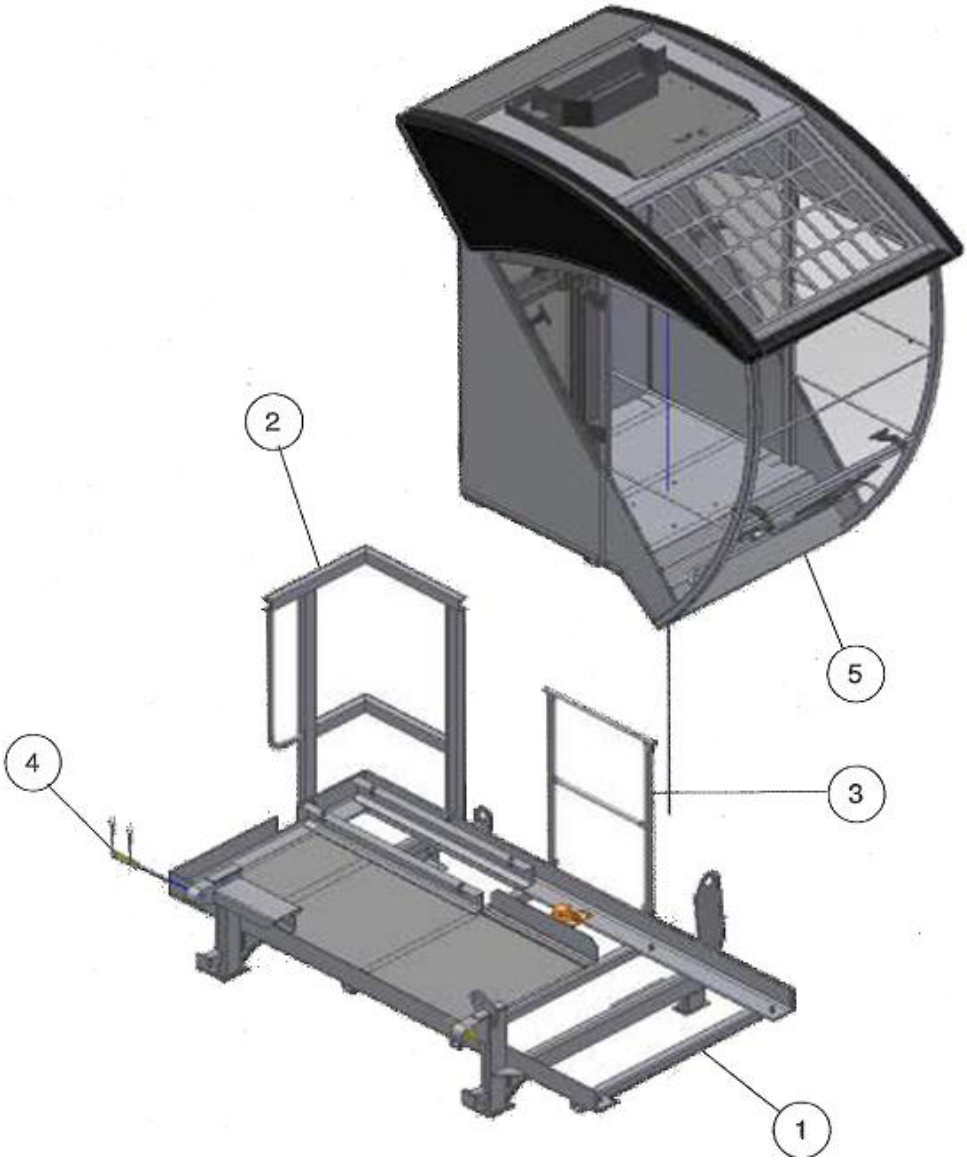

No	Code	Qty	Description & Specification	Remark
CABIN AND "QEG" UPPORT PLATFORM				
1		1	Platform	
2		1	Frame	
3		1	Safety rail	
4		2	Pin Φ30x128	
5		1	Cabin	

3.3.2.1、Ground assembly of cab support frame/main electrical box (Q.E.G.)

Sling the cab support frame/main electrical box (Q.E.G.) through the built-in 4 eyebolts by the special hadling device supplied (picture 2.1.1)

Lift the unit and place it on the upper slewing ring support, securing it with 2 pins Φ30X128 and respective 4 split pins 6X105 (picture 2.1.2

Picture 2.1.1

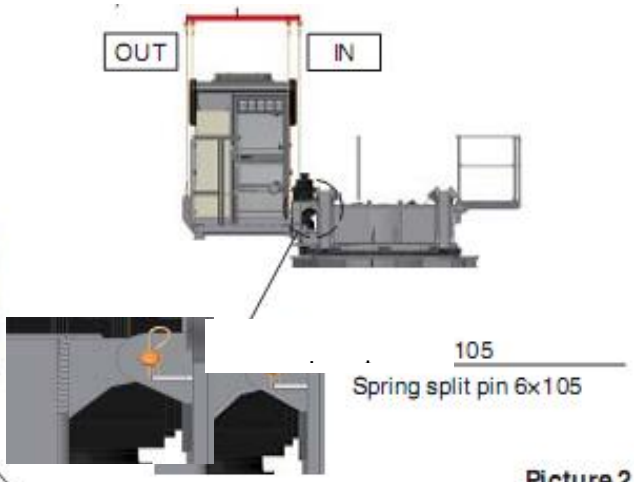

Picture 2.1.2

3.3.2.2、Ground assembly of upper slewing ring support right platform-DX

1)Sling the platform at the bottom with the belts provided, lift and place it on the upper slewing ring support;

2)Secure it with 2 pins Φ30X128 and respective 4 spring split pins 6X100 (picture 2.1.3)

3)Assemble the safety rails on the right platform-DX securing them with the proper spring split

pins 6! á105

4)Position the bar for coupling of the operator’s safety rope spring catch (picture 2.1.3) and secure it by spring split pin 6X105

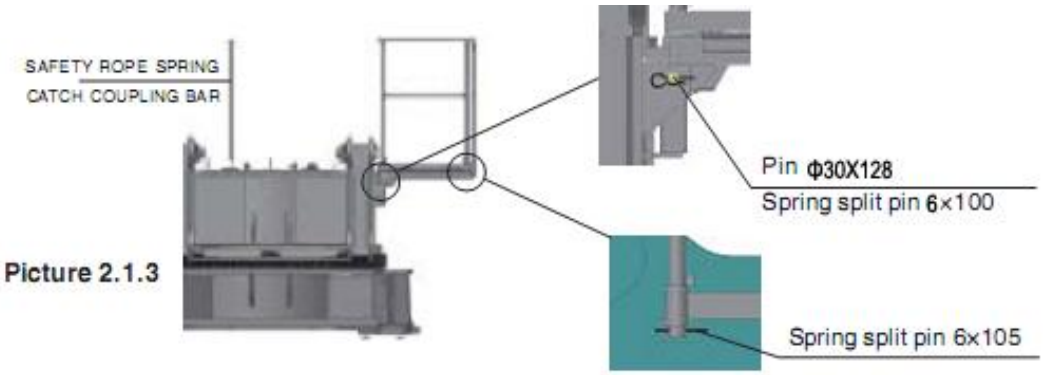

Picture 2.1.3

3.3.3、OVERHEAD ASSEMBLY OF THE SLEWING UNIT

Sling the slewing unit in the proper 3 eyebolts (position [1], [2], [3] of picture 2.1.5, 2.1.5.a and 2.1.5.c).

If assembling the slewing unit without cab, main electrical box (Q.E.G) and right platform-DX, sling the group through holes D55 intended for connection of the counter-jib A-frame frame (position [1],[2], [3] of picture 2.1.5.b and 2.1.5.d).

Picture 2.1.5

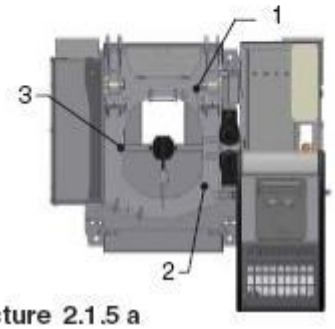

Picture 2.1.5 a

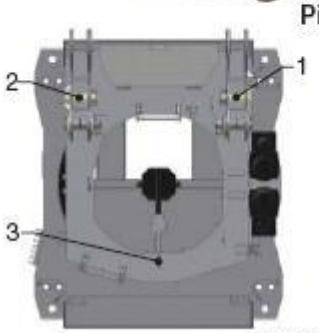

Picture 2.1.5 b

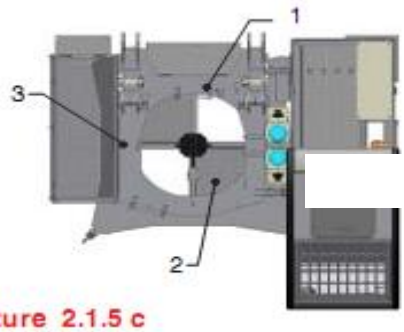

Picture 2.1.5 c

H20

Picture 2.1.5 d

Sling, lift and place the slewing unit on the top tower section (picture 2.1.6).

Line up the mounting brackets on the lower slewing ring with the tower lugs (both intended for raising of the tower by top climbing cage), making sure as well that the access shaft on the lower slewing ring support coincides with the top tower section ladder.

picture 2.1.6

DANGER

ADVICE FOR THE ERECTION OPERATORS STANDING ON THE TOP TOWER SECTION PLATFORM

- With the slewing unit being moved close to you for installation, be careful and keep your body below the top tower section to avoid any risk of crushing and/or shearing.

- Prior to going on erecting the crane, definitely secure the lower slewing ring support to the tower by the special assembly equipment supplied, following the same operating instructions provided for the tower erection

To carry out the electrical connections required to place the crane in service

3.4、THE COUNTERJIB

3.4.1、THE COUNTERJIB COMPONENTS

	DESCRIPTION	LENGTH	QTY	WEIGHT
	COMPLETE COUNTERJIB UNIT (FOOTBOARD + PLATFORMS +WINCHES+ELECTRICAL BOXES)	2.86m WIDTH 3.22m HEIGHT 2.21m	1	JLT140F8 7345kg JTL140F10 7590kg

	DESCRIPTION	LENGTH	QTY	WEIGHT
	COUNTERJIB UNIT (FOOTBOARD + +WINCHES WITHOUT GEARMOTORS +ELECTRICAL BOXES)	5.86m WIDTH 2.58m HEIGHT 2.12m	1	JTl140F8 5700kg JTL140F10 5830kg

	DESCRIPTION	LENGTH	QTY	WEIGHT
	FRONT RIGHT PLATFORM FOR COUNTERJIB FOOT-BOARD complete of handrails	4.61m WIDTH 0.9m HEIGHT 1.49m	1	245kg

	DESCRIPTION	LENGTH	QTY	WEIGHT
	FRONT LEFT PLATFORM FOR COUNTERJIB FOOT-BOARD (complete of handrails)	4.65m WIDTH 0.9m HEIGHT 1.49m	1	249kg

	DESCRIPTION	LENGTH	QTY	WEIGHT
	BALLAST PLATE-Z1	0.37m WIDTH 0.06m HEIGHT 0.18m	1	17.5kg

	DESCRIPTION	LENGTH	QTY	WEIGHT
	BALLAST PLATE-Z2	0.88m WIDTH 0.06m HEIGHT 0.09m	1	27.5kg

	DESCRIPTION	LENGTH	QTY	WEIGHT
	SUPPORT-A1 FOR 3-PART-LINE	0.230m WIDTH 0.11m HEIGHT 0.08m	1	3kg

	DESCRIPTION	LENGTH	QTY	WEIGHT
	SUPPORT- A2 FOR 3-PART-LINE	0.285m WIDTH 0.14m HEIGHT 0.08m	1	4kg

	DESCRIPTION	LENGTH	QTY	WEIGHT
	COUNTERWEIGHT-A	3.0m WIDTH 0.93m HEIGHT 1.26m	1	5000kg

	DESCRIPTION	LENGTH	QTY	WEIGHT
	COUNTERWEIGHT-B	3.6m WIDTH 1.0m HEIGHT 0.66m	1	5000kg

	DESCRIPTION	LENGTH	QTY	WEIGHT
	COUNTERWEIGHTS HOLDING FRAME	1.234m WIDTH 0.5m HEIGHT 0.07m	1	57kg

3.4.2、THE COUNTERJIB SPARE PARTS

COUNTERJIB FOOT-BOARD

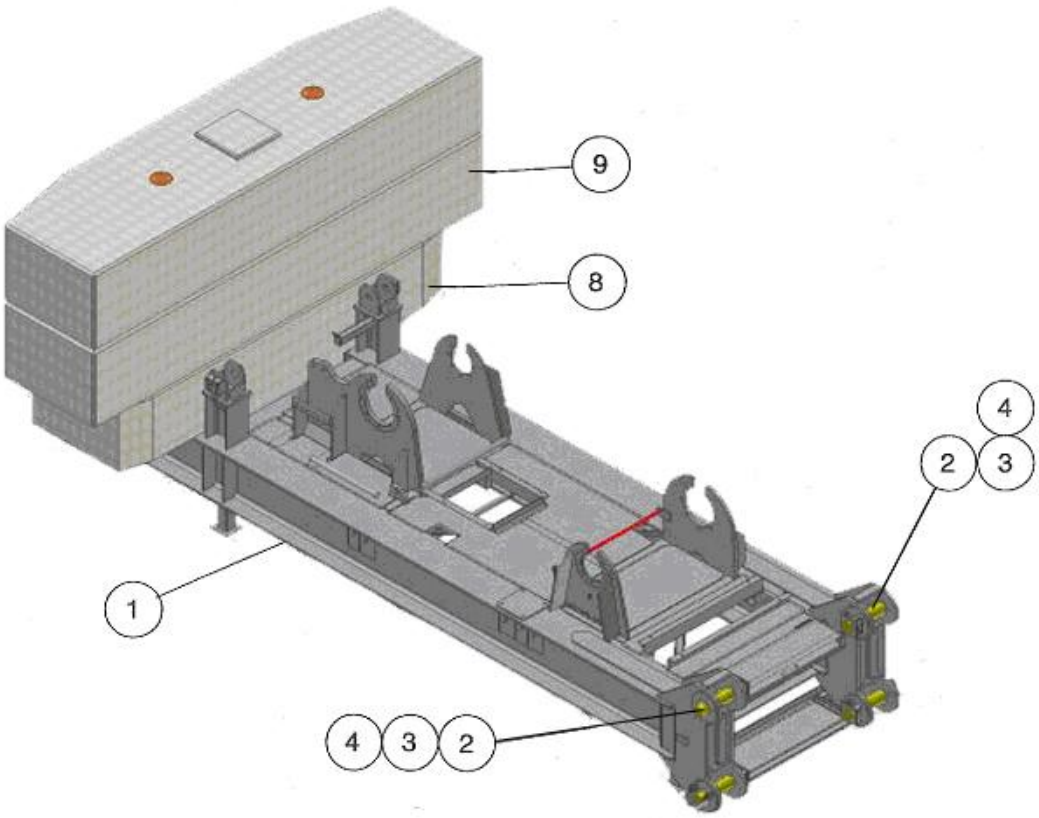

No	Code	Qty	Description & Specification	Remark
			COUNTERWEIGHT FOOT-BOARD	
1		1	Frame	
2		4	Pin Φ85x360	
3		4	Pin Φ16x142	
4		4	Spring split pin	
8		1	Counterweight A（5000kg）	
9		2	Counterweight B（5000kg）	

CABIN AND QEG SUPPORT PLATFORM

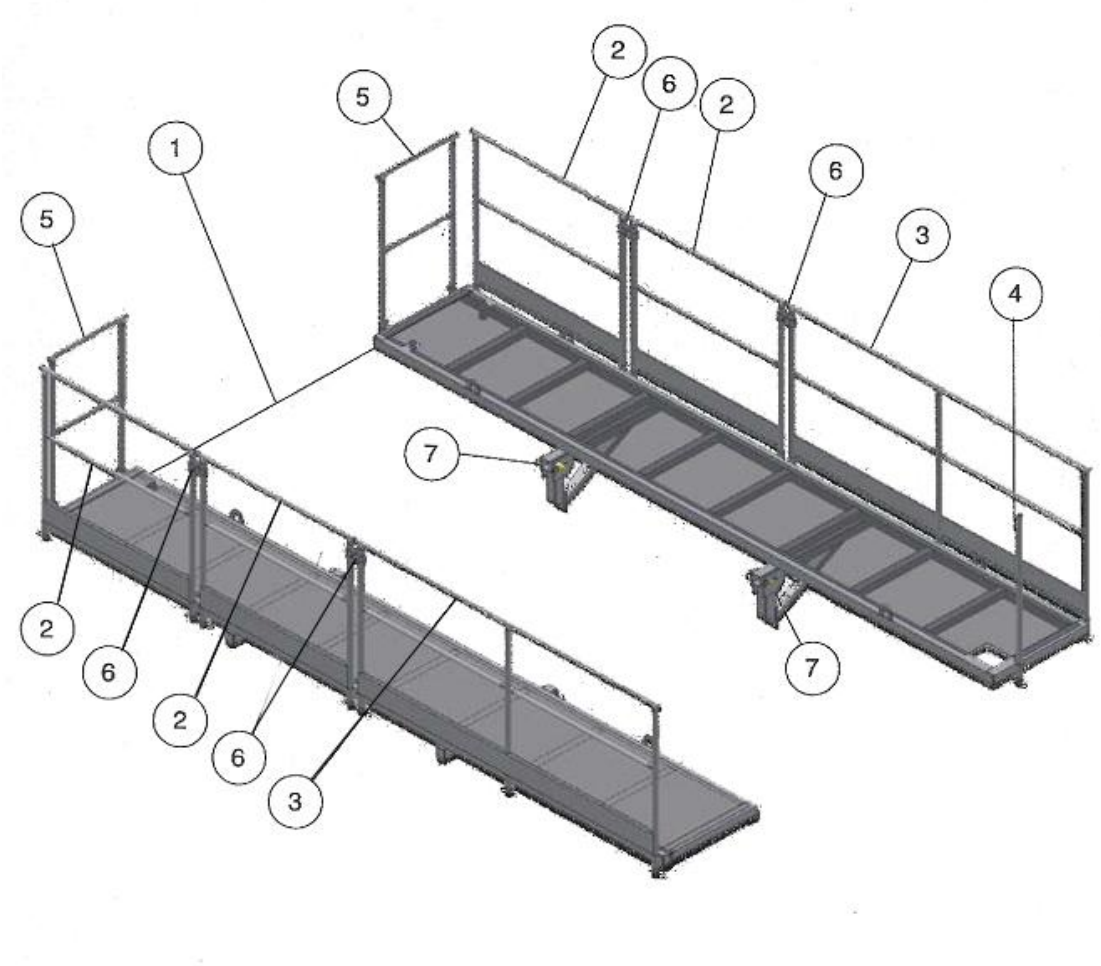

No	Code	Qty	Description & Specification	Remark
			COUNTERJIB PLATFORMS	
1		1	Platform	
2		4	Safety rail	
3		2	Safety rail	
4		1	Stanchion	
5		2	Safety rail	
6		4	Bracket	
7		4	Pin Φ30x128	

COUNTERWEIGHT HOLDING FRAME

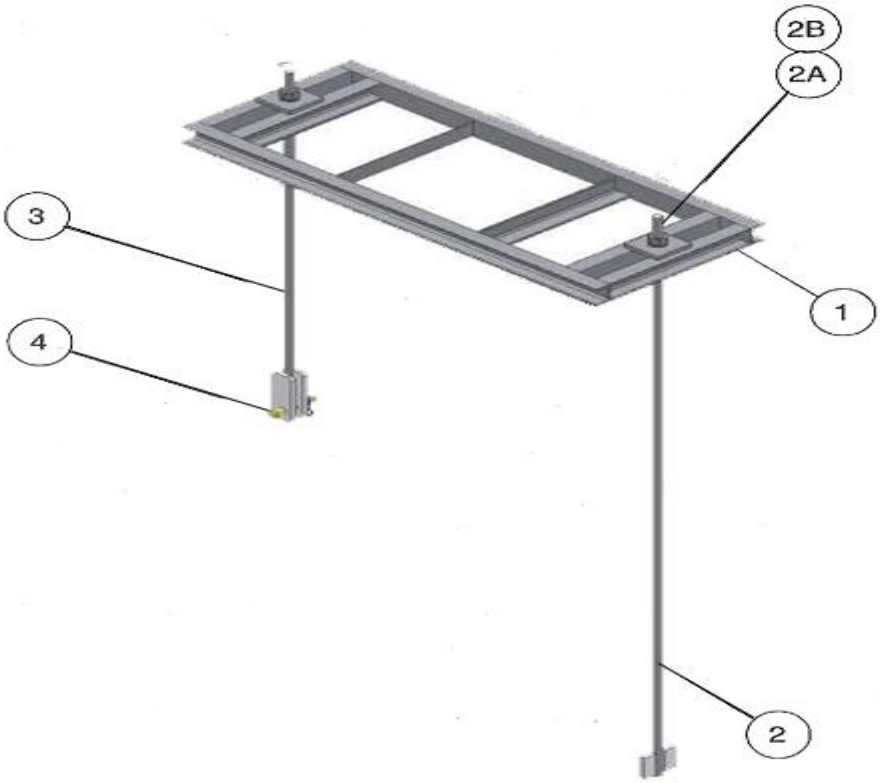

No	Code	Qty	Description & Specification	Remark
			COUNTERWEIGHT HOLDING FRAME	
1		1	Frame	
2		1	Tie-bar	
2a		2	Tall nut M24	
2b		2	Plane washer M24	
3		1	Tie-bar	
4		1	Pin Φ25x60	

3.4.2.1、ASSEMBLY OF THE COUNTERJIB COMPLETE OF WINCHES

Since the counter jib is delivered with built-in hoisting and luffing winches (with respective rope wound up), as well as with the control electric box (QESB) and resistance box (both preassembled and wired at the Manufacturer! ¯ s factory) already in place, sling the unit through the special eyebolts lift it off and then lean it on the ground.

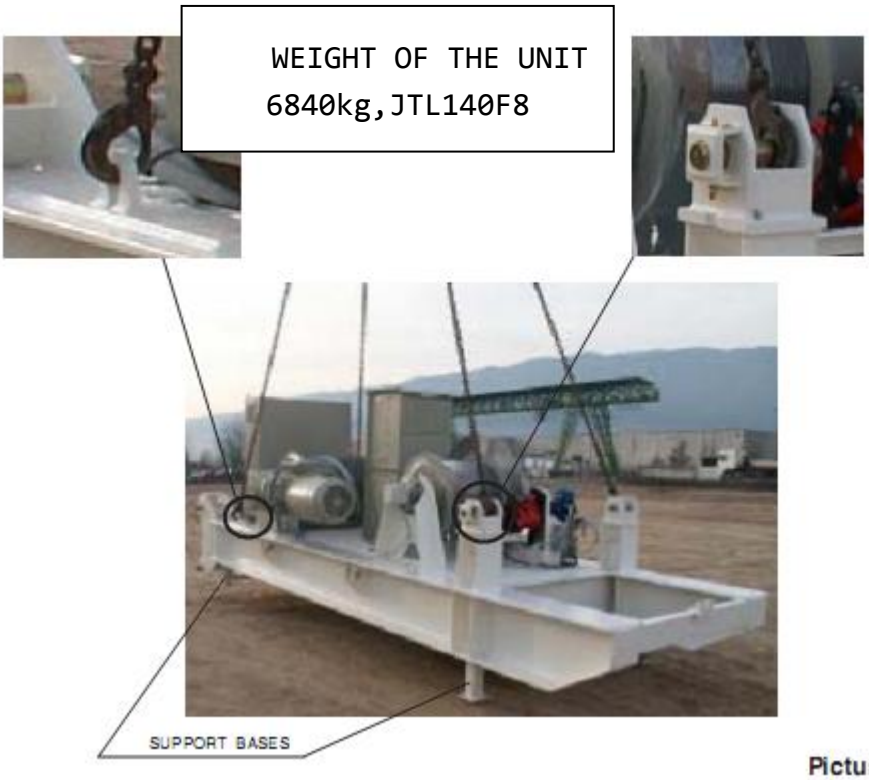

Picture 2.2.1

⚠3.4.2.2、Assembling the counterjib platforms and safety rails

Sling and assemble the right and left platforms securing them with 4 pins Φ30X128 and proper spring split pins 6X105

Assemble the safety rails securing them with spring split pins 6X105 (pictures 2.2.2 and 2.2.3)

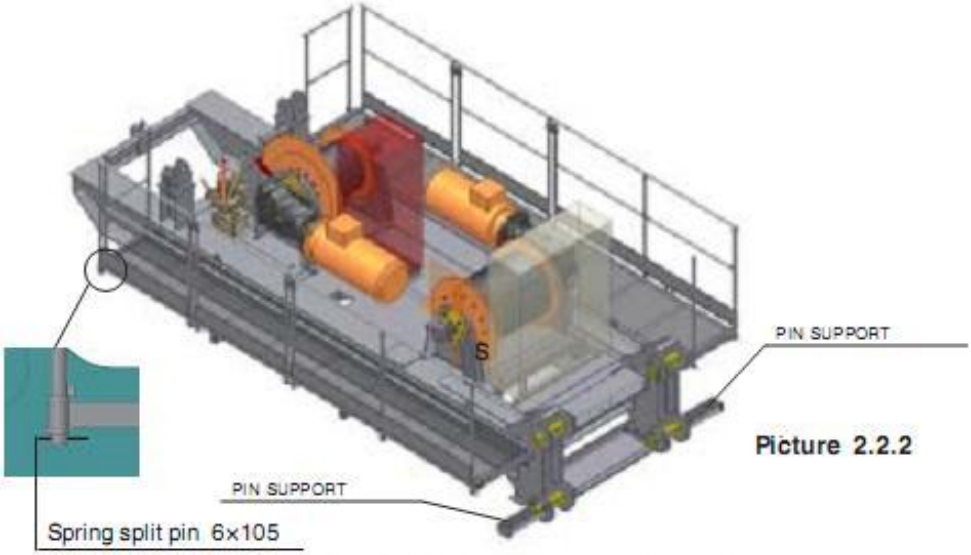

Picture 2.2.2

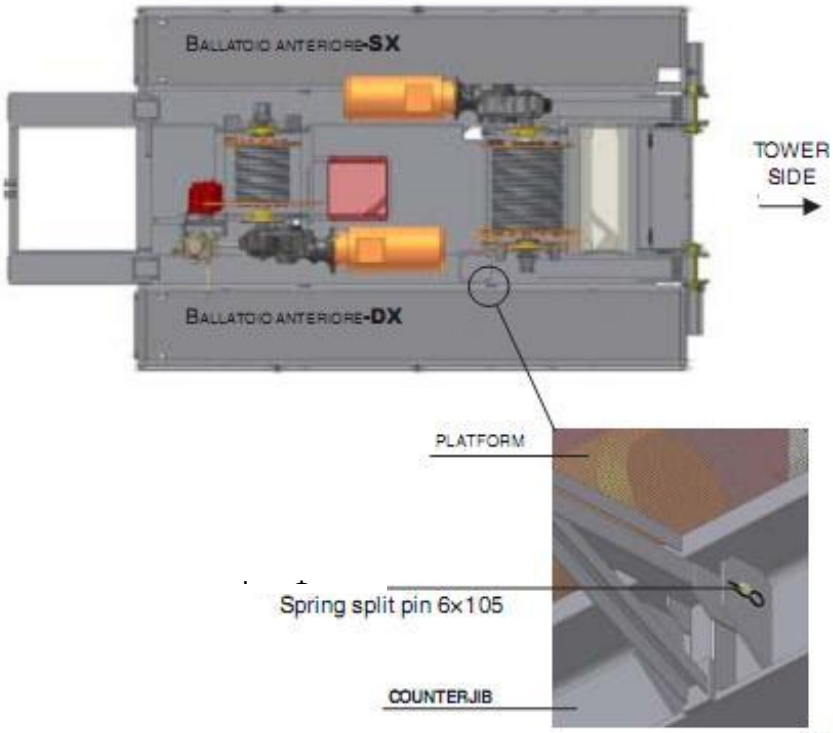

Picture 2.2.3

3.4.3、OVERHEAD ASSEMBLY OF THE COUNTERJIB

Sling the counterjib unit by 4 slings with minimum length 7 m through the holes for the A-frame connection (counterweight side) and through the special lifting eyebolts (jib side) (picture 2.2.5).

For a perfect balancing of the counterjib and an easier pin-connection with the upper slewing ring support, increase the jib-side sling length by approx.300 mm. using two shackles (picture2.2.6).

Place the special spacer between the structure and the hook, thus allowing the latter to stand in the correct position on the left (picture 2.2.7).

Secure a synthetic hold-to-position rope in the counterweight zone to orient/stabilize the lifting operation.

WEIGHT OF THE UNIT

7334kg，JTL140F87790kg，JTL140F10

Picture 2.2.5

Picture 2.2.6

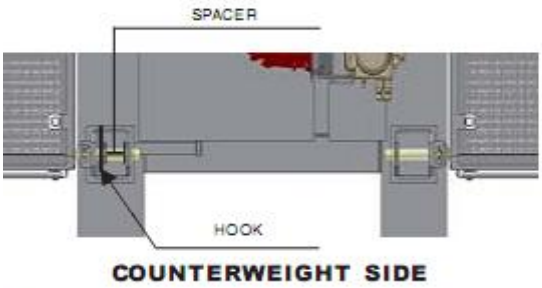

Picture 2.2.7

Lift the counterjib and, when close to the slewing unit, orient and bring it next to the upper slewing ring support as shown in picture 2.2.8 - 2.2.9.

Picture 2.2.8

Picture 2.2.9

DANGER

During this phase, the operator is waiting for the counterjib standing on the upper slewing ring support in safety condition, hooked to the special bar for coupling of his safety rope spring catch (picture 2.2.8.a and picture 2.2.8.b).

Picture 2.2.8.a

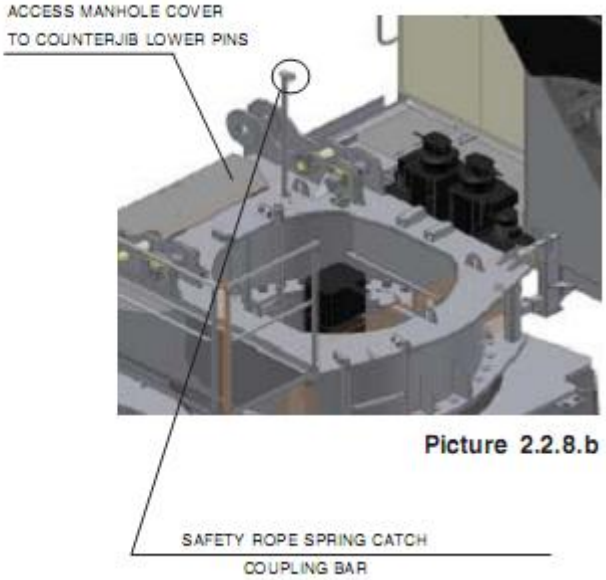

Picture 2.2.8.b

Connect the counterjib to the upper slewing ring support with 2 pins Φ 85X360, respective pin-locks Φ 16X142 and spring split pins 4X40 (upper side) (picture 2.2.10)

Lower the counterjib as far as it engages the proper housing.

Open the access manhole covers to the lower pins of the upper slewing ring support and of the counterjib (picture 2.2.12); place the remaining 2 pins Φ 85X360, respective pin-locks Φ 16x142 and spring split pins 4X80 (picture 2.2.11)

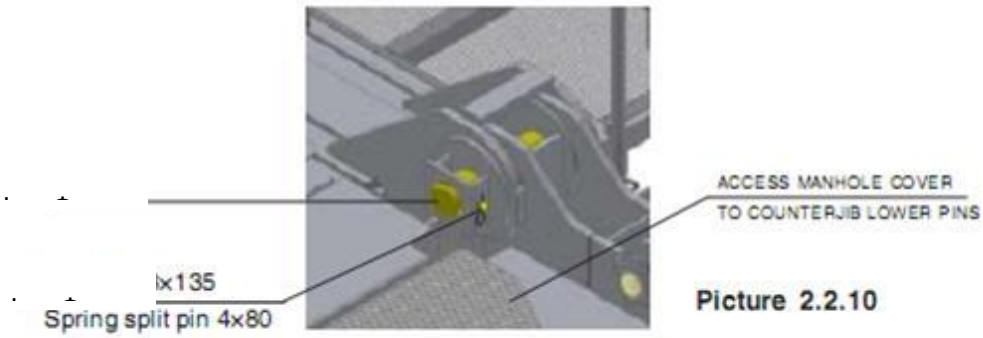

Picture 2.2.10

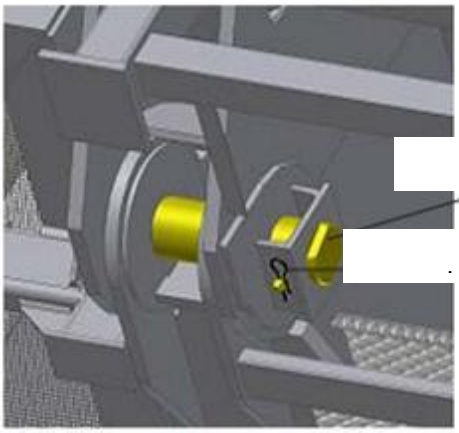

Picture 2.2.11

LATO INFERIORE CONTROBRACCIO

On inserting the lower pins with respective lock pins and spring split pins, close the access manhole covers to the lower pins; lower the platform connecting the service platform-**DX** on the upper slewing ring support to the counterjib right platform and secure it by spring split pin 4x80 (picture 2.2.12)

Secure the safety chains to the rings provided (picture 2.2.12).
Remove the slings.

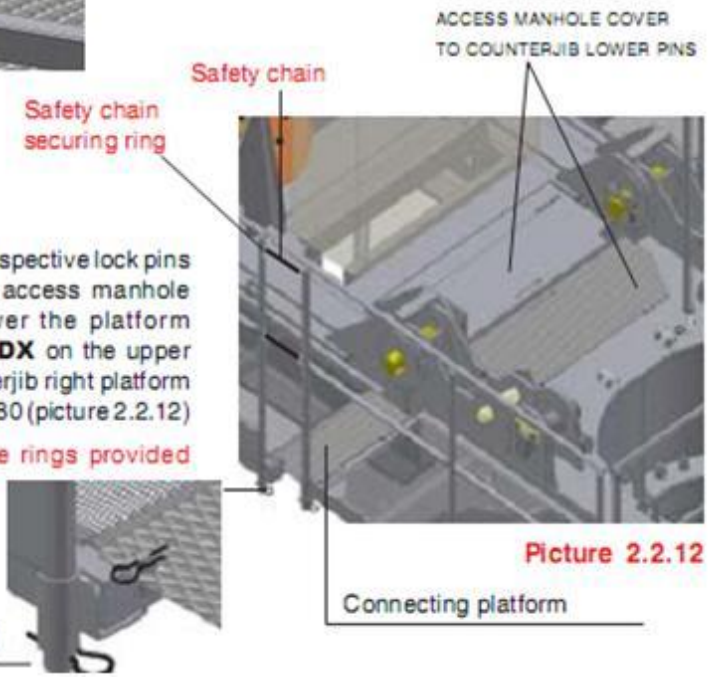

Picture 2.2.12

3.5、THE A-FRAME

3.5.1、THE A-FRAME COMPONENTS

	DESCRIPTION	LENGTH	QTY	WEIGHT
	COUNTERJIB A-FRAME UNIT	6.530m WIDTH 2.08m HEIGHT 11.60m	1	3067kg
	DESCRIPTION	LENGTH	QTY	WEIGHT
	COUNTERJIB A-FRAME FRAME	11.6m WIDETH 1.60m HEIGHT 0.7m	1	1425kg
	DESCRIPTION	LENGTH	QTY	WEIGHT
	COUNTERJIB A-FRAME TIE-BAR	9.43m WIDTH 1.53m HEIGHT 0.36m	1	390kg
	DESCRIPTION	LENGTH	QTY	WEIGHT
	ROD FOR COUNTERJIB A-FRAME FRAME	5.09m WIDETH 0.09m HEIGHT 0.09m	2	166kg

	DESCRIPTION	LENGTH	QTY	WEIGHT
	COUNTERJIB A-FRAME HEAD PLATFORM (complete of handrails)	2.02m WIDTH 1.20m HEIGHT 1.16m	1	117kg
	COUNTERJIB A-FRAME FRAME LADDER (complete of	5.3+5.2m WIDTH 0.61m HEIGHT 0.52m	1+1	147kg
	JIB BUMPER	3.465m WIDTH 1.83m HEIGHT 0.41m	1	503kg
	MOBILE SHEAVE BLOCK FOR LUFFING ROPE	1.08m WIDTH 0.37m HEIGHT .060m	1	132kg

3.5.2、THE A-FRAME SPARE PARTS

COUNTERJIB A-FRAME

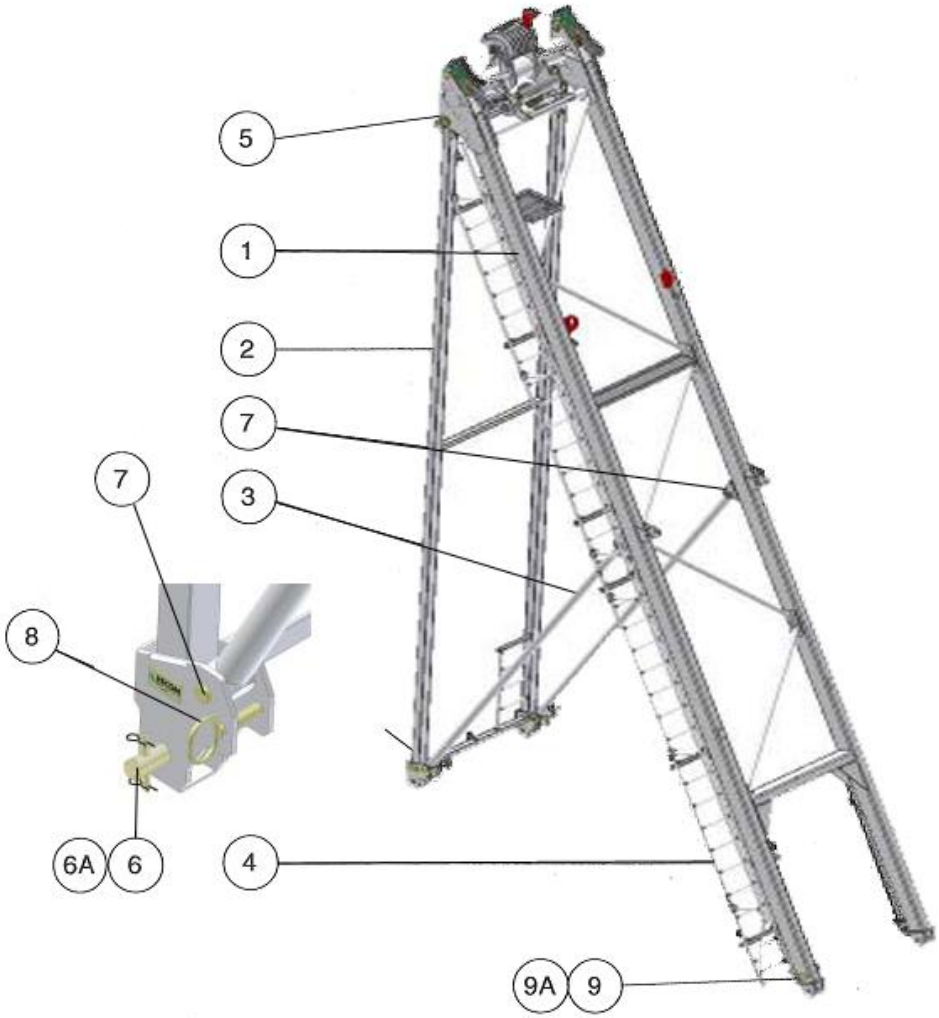

No	Code	Qty	Description & Specification	Remark
			COUNTERJIB A-FRAME	
1		1	Main frame	
2		1	Tie-bars	
3		2	Tie-bars	
4		1	Rod	
5		2	Pin Φ50x165	
6		2	Pin Φ50x230	
6a		2	Pin Φ18x120	
7		4	Pin Φ40x145	
8		2	Pin Φ30x145	

9		2	Pin Φ55x245	
9a		2	Pin Φ16x105	

COUNTERJIB A-FRAME PLATFORM

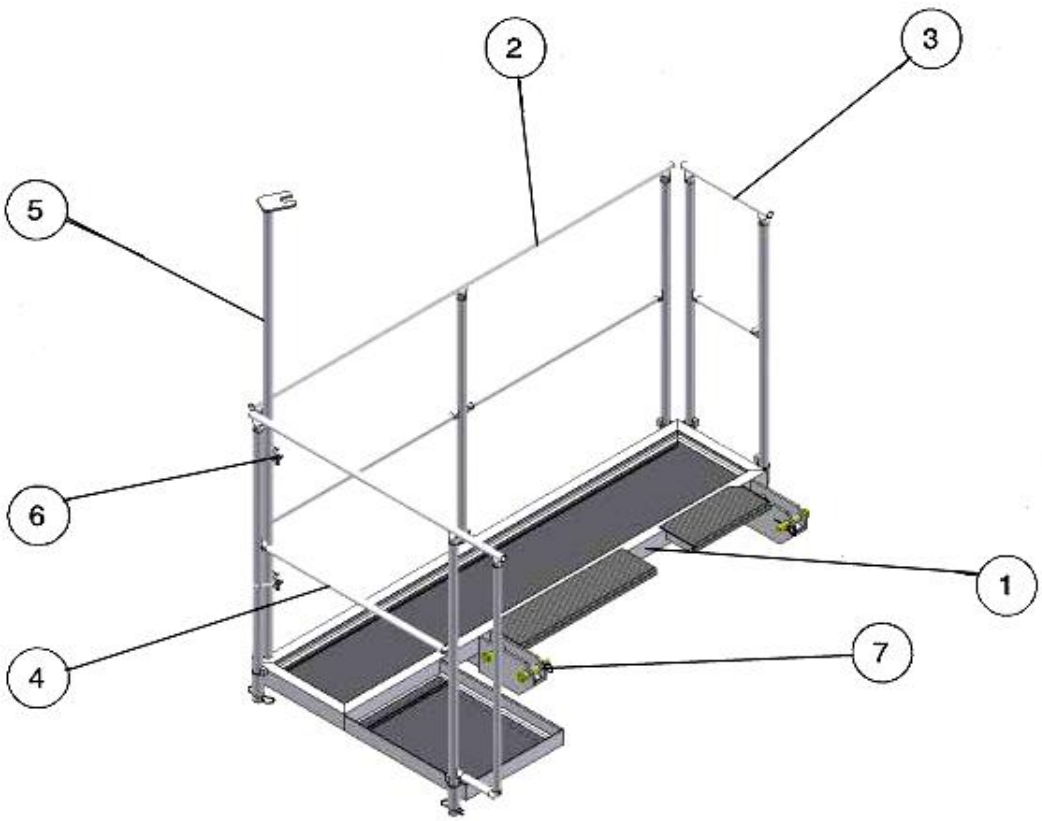

No	Code	Qty	Description & Specification	Remark
			COUNTERJIB A-FRAME HEAD PLATFORM	
1		1	Platform	
2		1	Safety rail	
3		1	Safety rail	
4		1	Safety rail	
5		1	Support	
6		1	U-bolt	
7		4	Pin Φ25x120	

JIB BUMPER

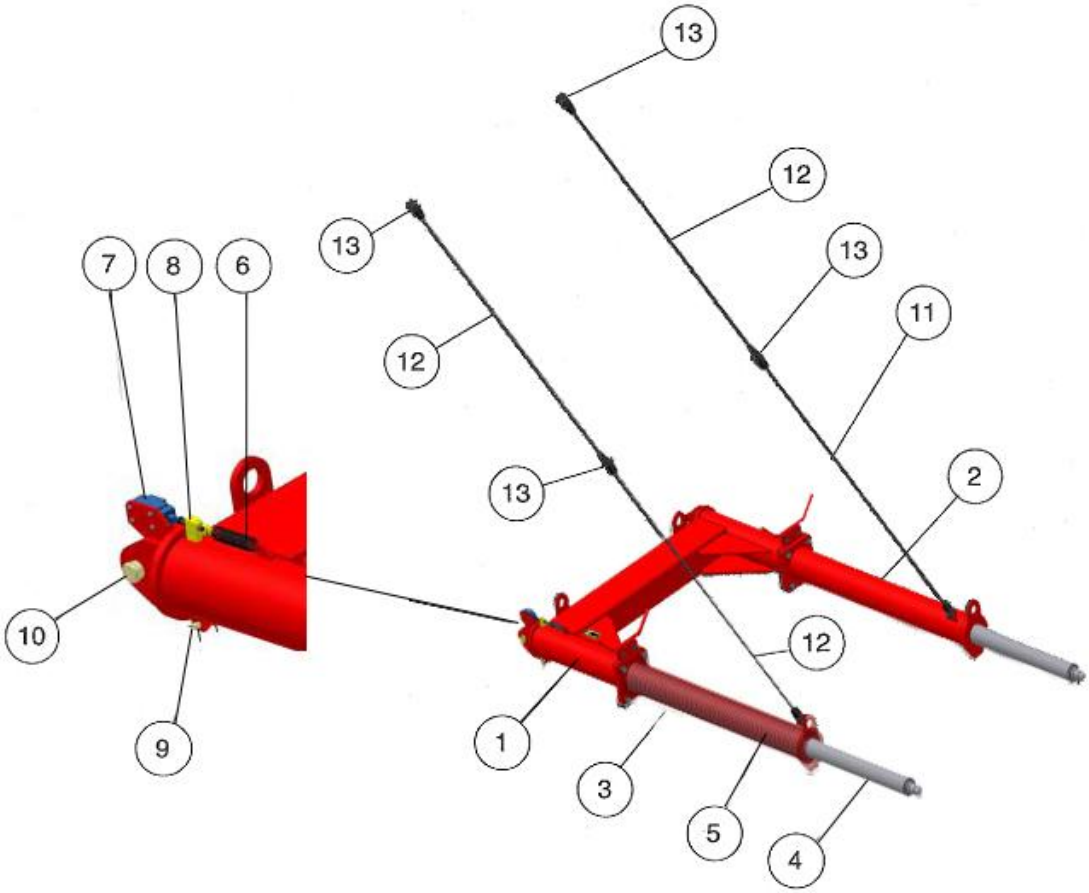

No	Code	Qty	Description & Specification	Remark
			JIB BUMPER	
1		1	Jib bumper	
2		1	Jib bumper – LEFT	
3		1	Jib bumper – RIGHT	
4		2	Jib bumper	
5		4	Spring	
6		1	Spring	
7		1	Limit switch	
8		1	Lever	
9		1	Pin Φ15x48	
10		2	Pin Φ40x130	
11		2	Tie-ba	
12		2	Tie-ba	
13		6	Pin Φ20x40	

COUNTERJIB A-FRAME HEAD

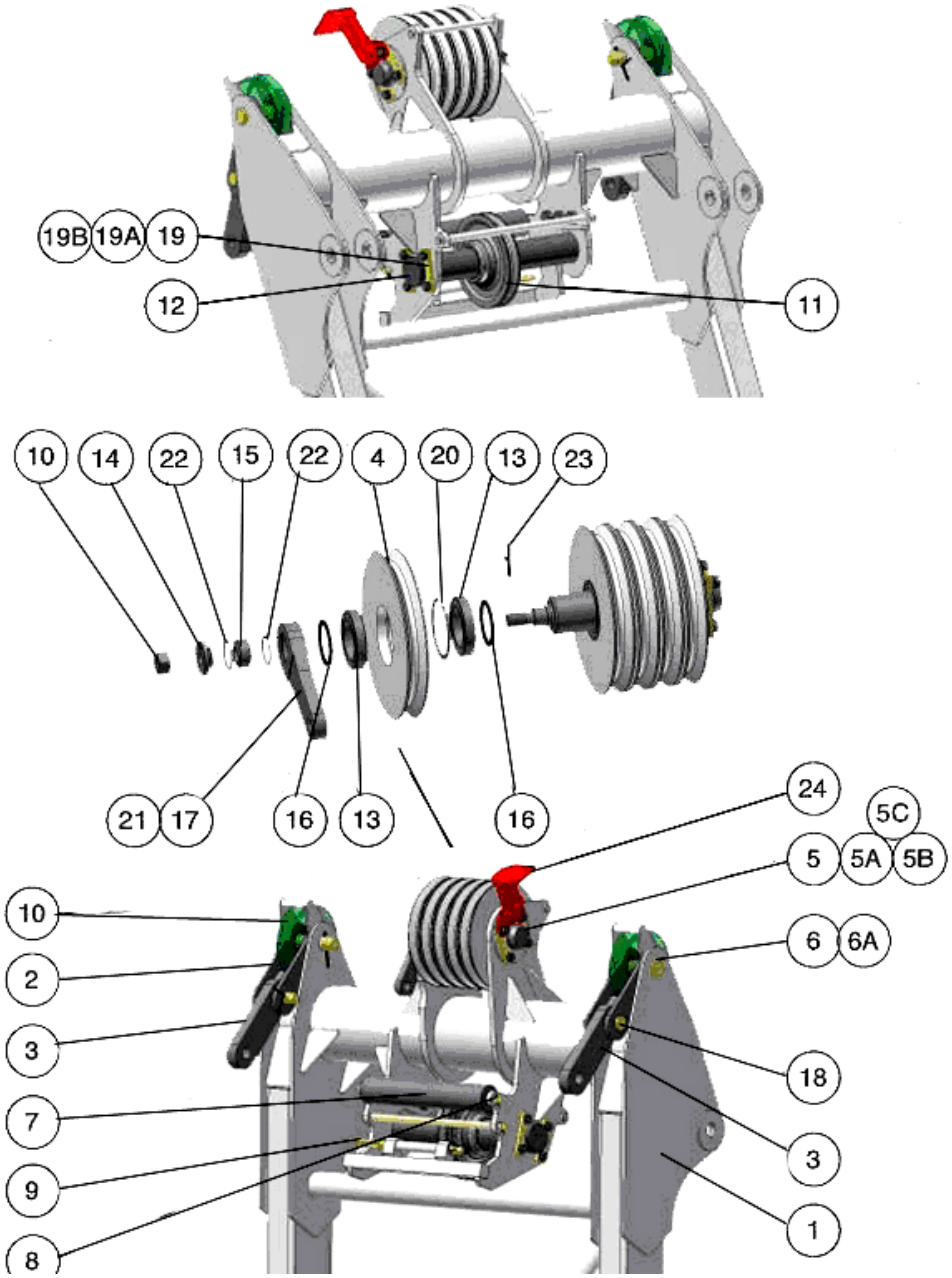

No	Code	Qty	Description & Specification	Remark
			COUNTERJIB A-FRAME HEAD	
1		1	Main frame	
2		2	Tie-bracket S1	
3		2	Tie-bracket S2	
4		5	Sheave E370|130B48	
5		1	Pin Φ85x380	
5a		2	Pin lock plate	
5b		4	Screw M10x40	
5c		4	Washer M10	
6		2	Pin Φ50x150	
6a		4	Spacer 70x50.5x4	
7		1	Roller E180|40L450	
8		1	Pin Φ40x520	
9		1	Pin Φ40x520	
10		2	Sheave E250|50B60	
11		1	Sheave E350|100B125	
12		1	Pin Φ90x536	
13		10	Bearing	
14		1	Washer	
15		1	Ball joint	
16		6	Spacer 100x85.5x5	
17		1	Connecting rod	
18		4	Pin Φ40x105	
19		2	Pin lock plate	
19a		4	Screw M10x35	
19b		4	Washer M10	
20		5	Spacer	
21		1	Socket	
22		2	Spacer	
23		1	Split pin	
24		1	Support	

MOBILE SHEAVE BLOCK FOR LUFFING ROPE

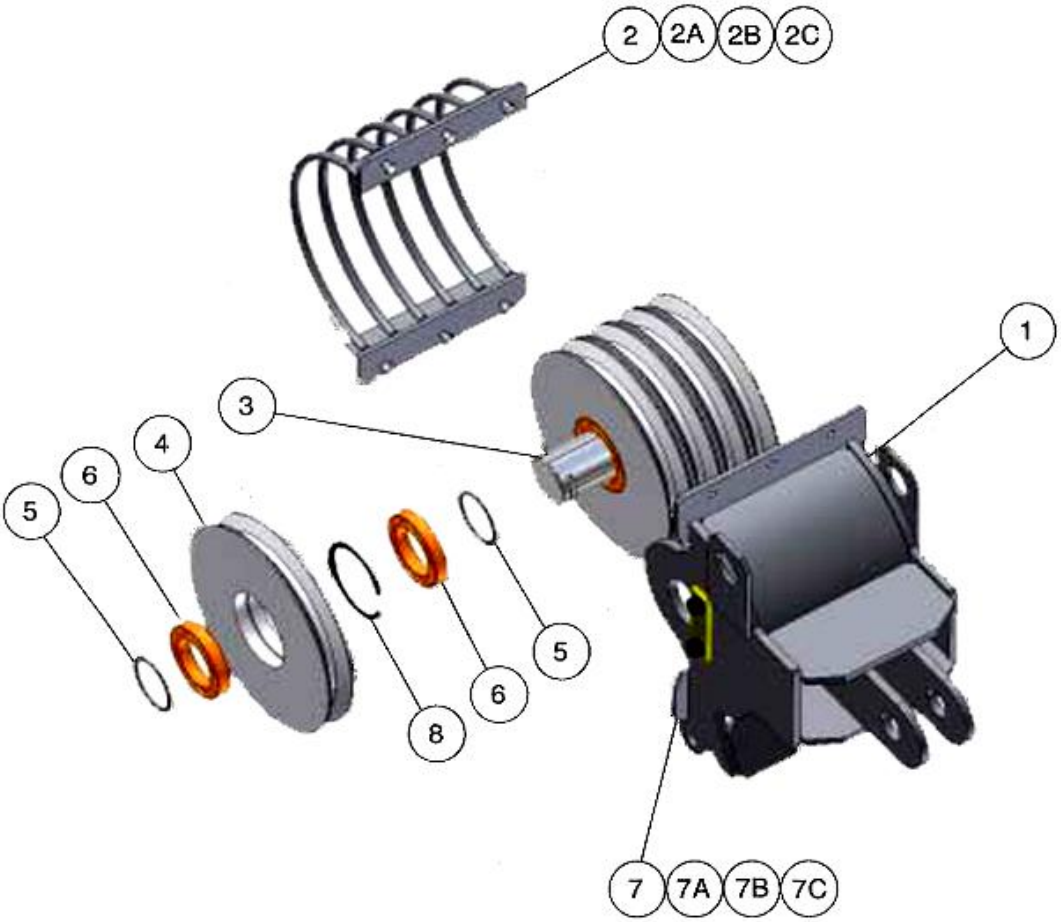

No	Code	Qty	Description & Specification	Remark
			MOBILE SHEAVE BLOCK FOR LUFFING ROPE	
1		1	Frame	
2		1	Protection	
2a		6	Screw M10x40	
2b		6	Tall nut M10	
2c		6	Washer M10	
3		1	Pin Φ85x360	
4		7	Sheave E370|130B48	
5		6	Spacer 95x85.5x5	
6		10	Bearing	
7		2	Pin lock plate	
7a		4	Screw M10x25	
7b		4	Washer M10	

8		5	Spacer	

3.5.2.1、ASSEMBLING THE COUNTERJIB A-FRAME

Arrange an adequate area and ground face for the unit.

The counterjib A-frame comes to the assembly field with the following components already in place:

counterjib A-frame frame equipped with fixed and mobile sheave block for luffing rope; with rod for counterjib A-frame frame, ladder, platform, jib bumper, jib bumper tie-bars, pins and split pins.

Arrange the unit for the overhead assembly as follows:

-Lift the jib bumper by the special eyebolts, thus allowing the assembly of the jib bumper tie-bars (picture 2.3.1);

-Secure the jib bumper tie-bars with pins Φ20X40 and spring split pins 4X80; Use the synthetic safety rope to hold them in the proper position and prevent them from overturning (picture 2.3.2);

Picture 2.3.1

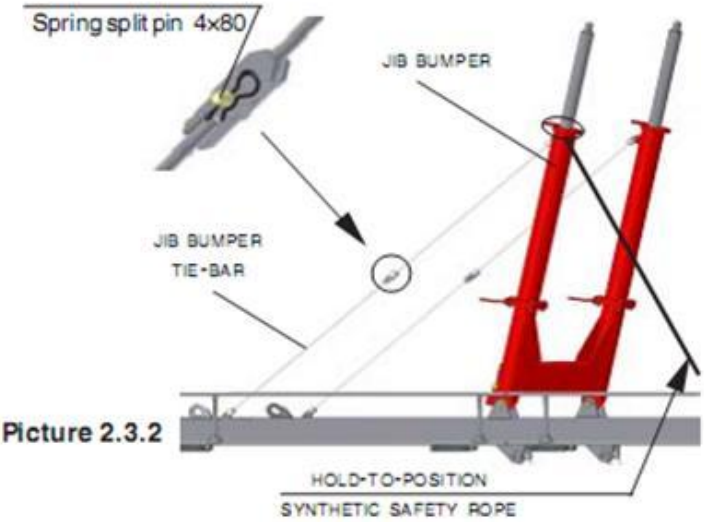

Picture 2.3.2

Remove pins Φ30X145 and split pins 5X100 on the right and left side of the tie-bar (picture 2.3.3); lift the unit off the ground through the special eyebolts (picture 2.3.4) until you can place the counterjib A-frame head platform and assemble the safety rails.

Picture 2.3.3

Picture 2.3.4

Holding the two pins [1] to position, remove the two pins [2] (picture 2.3.5); rotate the platform from the transport position [T] (picture 2.3.5) to the working position [U] (picture 2.3.6) and place again the two pins [2] (picture 2.3.6 and 2.3.6.a);

[1] No. 2 pins Φ 25X120 with spring split pin 5X100

[2] No. 2 pins Φ 25X120 with spring split pin 5X100

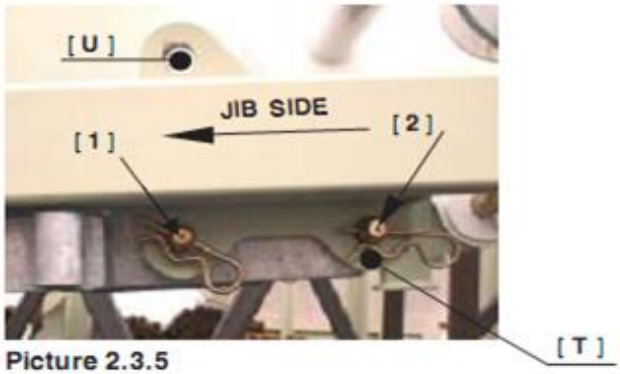

Picture 2.3.5

Picture 2.3.6

- With the counterjib A-frame head positioned as shown in picture 2.3.6.a, go on placing the safety rails securing them with the proper spring split pins 5x100 (picture 2.3.7 and 2.3.7.a); now assemble the anemometer support (picture 2.3.7.b).

Picture 2.3.6.a

Picture 2.3.7

Picture 2.3.7.a

Picture 2.3.7.b

Temporarily place the tie-ropes for the jib assembly on the counterjib A-frame head (fig. 2.3.8)according to the jib version chosen (type and quantity as per table 2.4.3 at para. 2.4.1.3) and secure them to tie-bar-S2 with the proper pins and split pins supplied.

To avoid damaging and replacing the split pin, do not bend it completely during this phase.

Later you will need to withdraw it with the pin connecting the jib assembly tie-bars on the

A-frame head to the jib assembly tie-bars on the jib (see para. 2.4.2.5).

Picture 2.3.9

Picture 2.3.9.a

Picture 2.3.8

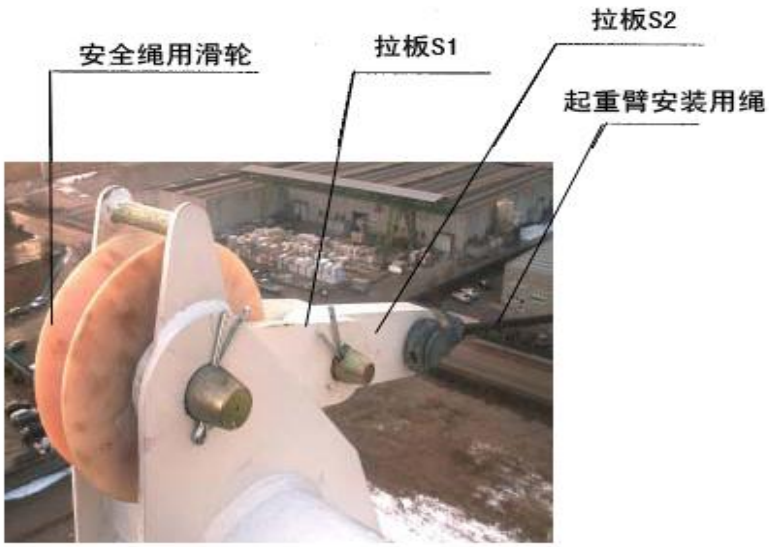

图2. 3. 8

图2. 3. 9

图2. 3. 9. a

Secure the right and left base of the A-frame tie-bar to the rod with 2 pins Φ 40X145 and spring split pins 6X105 (picture 2.3.10)

Should you need to stop the erection operations, check the ground for proper bearing capacity. As necessary, provide for an adequate level surface where leaning the counterjib A-frame unit on proper supports (see example in picture 2.3.10.a).

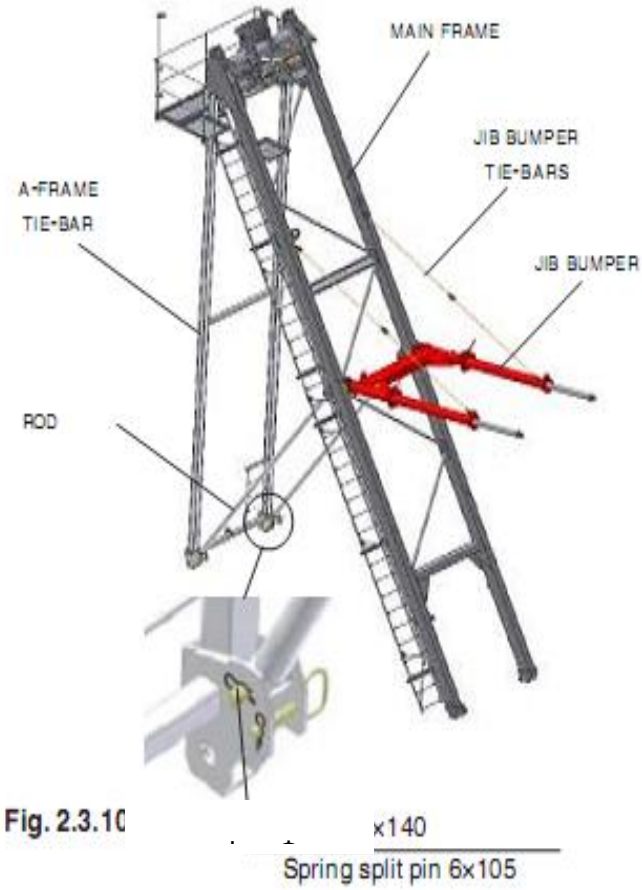

Picture 2.3.10.a

3.5.3、A-FRAME OVERHEAD ASSEMBLY

-In case the erection has been stopped, sling the main frame of the counterjib A-frame n the 2 points indicated in picture 2.3.11;

-Secure a synthetic rope to the base of the main frame to orientate/stabilize the lifting/positioning operation;

WEIGHT OF THE UNIT3070kg

Picture 2.3.11

Lift and bring the A-frame unit close to the counterjib (picture 2.3.12).

First secure it on the jib side with 2 pins Φ 55X245,pin-locks CS 16X105 and spring split pins 4X80 (picture 2.3.13)

Then secure it on the counterweights side with 2 pins CS 50X230,pin-locks CS 16X120 an spring split pins 4X80 (picture 2.3.14)

DANGER

Release the slings standing on the special platform, on securing oneself to the closest diagonal by the personal safety rope spring catch.

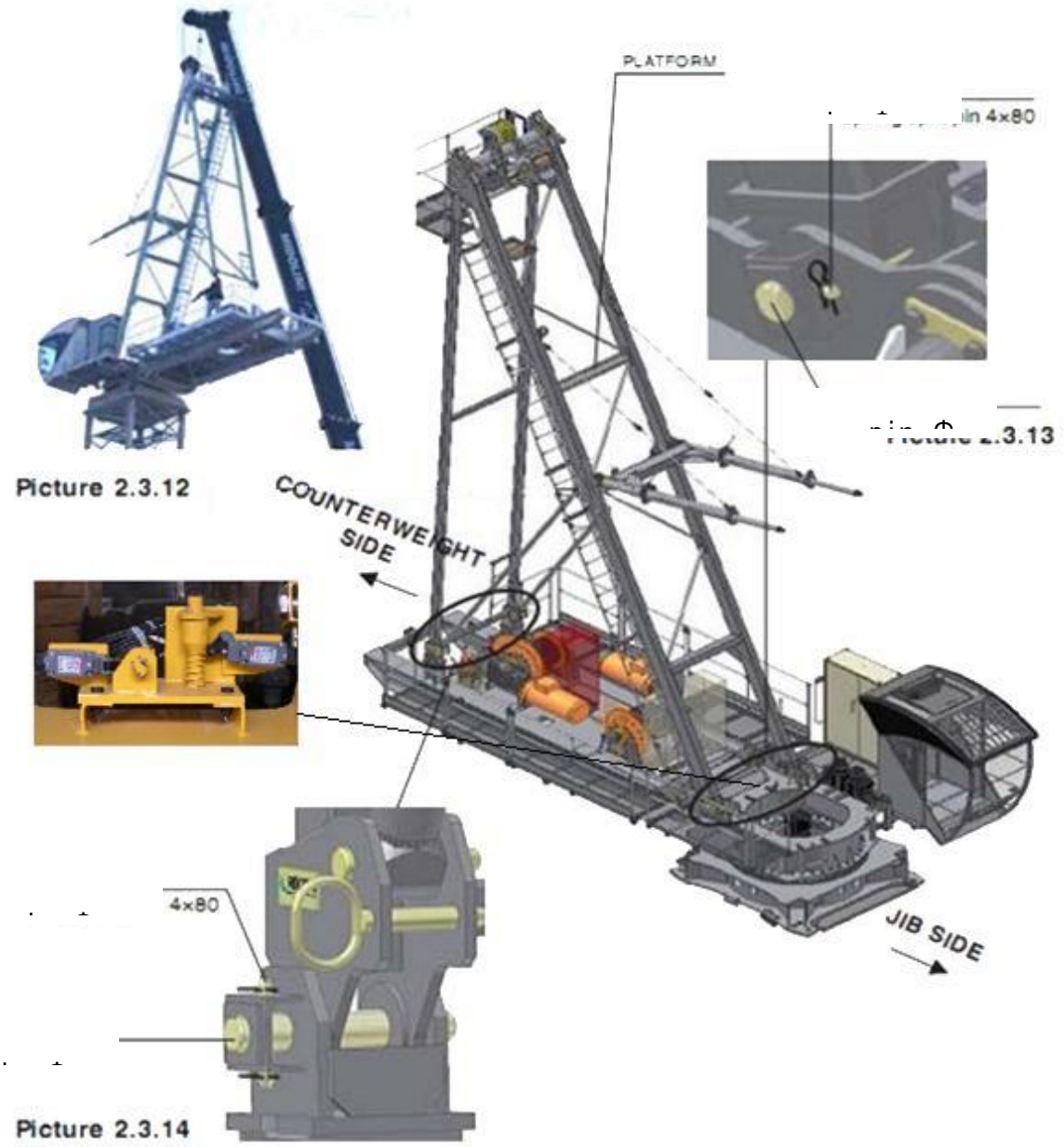

Picture 2.3.12

Picture 2.3.14

3.5.4、ASSEMBLY OF COUNTERWEIGHT A（5000kg）

Sling counterweight-A in the special couplers (picture 2.3.15).

Position the ballast block in the special compartment on the counterjib (pictu 2.3.16)

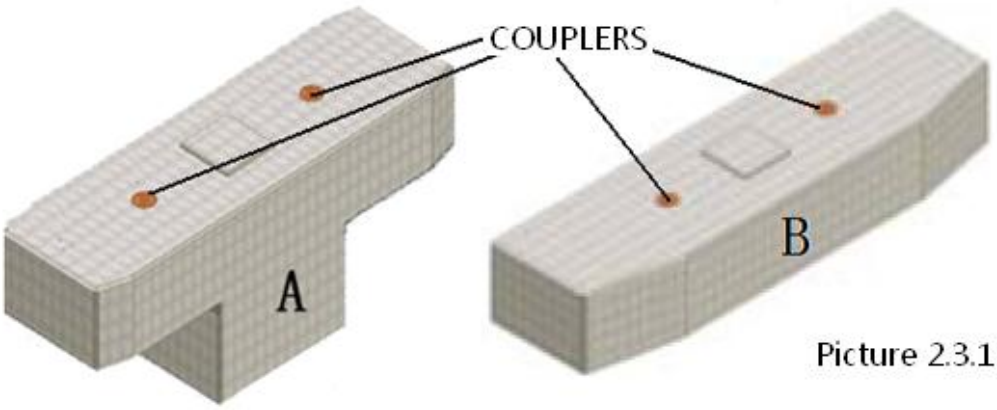

Picture 2.3.15

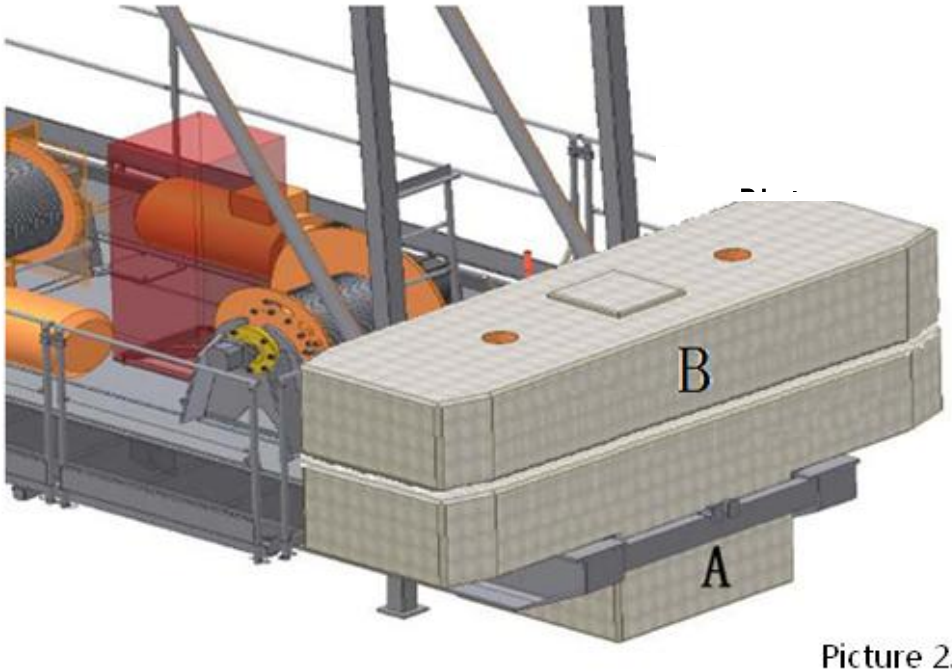

Picture 2.3.16

3.6、THE JIB、TIE-BAR AND HOOK INSTALLATION

3.6.1、THE JIB、TIE-BAR AND HOOK COMPONENTS

	DESCRIPTION	LENGTH	QTY	WEIGHT
	JIB SECTION-1	10.0m WIDTH 1.40m HEIGHT 1.20m	1	1227kg
	DESCRIPTION	LENGTH	QTY	WEIGHT
	JIB SECTION-2	10.0m WIDTH 1.40m HEIGHT 1.20m	1	952kg
	DESCRIPTION	LENGTH	QTY	WEIGHT
	JIB SECTION-3	5.175m WIDTH 1.40m HEIGHT 1.20m	4	503kg
	DESCRIPTION	LENGTH	QTY	WEIGHT
	JIB SECTION-7	5.175m WIDTH 1.40m HEIGHT 1.20m	1	487kg
	DESCRIPTION	LENGTH	QTY	WEIGHT
	JIB SECTION-8 with swinging sleeper)	6.420m WIDTH 1.40m	1	1093kg (complete of jib point

		HEIGHT		sleeper)
		1.20m		

	DESCRIPTION	LENGTH	QTY	WEIGHT
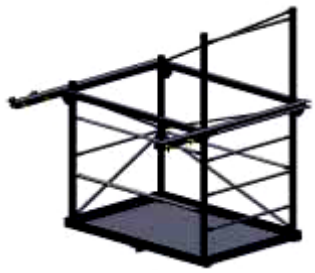	JIB POINT PLATFORM	0.94m	1	95kg
		WIDTH		
		0.94m		
		HEIGHT		
		2.55m		

	DESCRIPTION	LENGTH	QTY	WEIGHT
	JIB POINT SWINGING SLEEPER	0.86m	1	651kg
		WIDTH		
		0.192m		
		HEIGHT		
		0.79m		

	DESCRIPTION	LENGTH	QTY	WEIGHT
	2-PART LINE HOIST BLOCK	1.03m	1	180kg
		WIDTH		
		0.48m		
		HEIGHT		
		1.08m		

	DESCRIPTION	LENGTH	QTY	WEIGHT
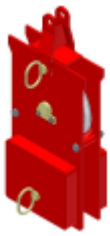	4-PART LINE HOIST BLOCK	0.43m	1	145kg
		WIDTH		
		0.23m		
		HEIGHT		
		0.95m		

	DESCRIPTION	LENGTH	QTY	WEIGHT
	8t HOOK (Hook holder + hook + shackle)		1	40kg
		WIDTH		
		HEIGHT		

	DESCRIPTION	LENGTH	QTY	WEIGHT
	10t HOOK (Hook + shackle)	WIDTH	1	40kg
		HEIGHT		

	DESCRIPTION	LENGTH	QTY	WEIGHT
	ASSEMBLY DEVICE FOR MOBILE SHEAVE BLOCK	0.31m	1	26kg
		WIDTH		
		0.25m		
		HEIGHT		
		0.372m		

3.6.2、THE JIB、TIE-BAR AND HOOK SPARE PARTS

JIB SECTION-1

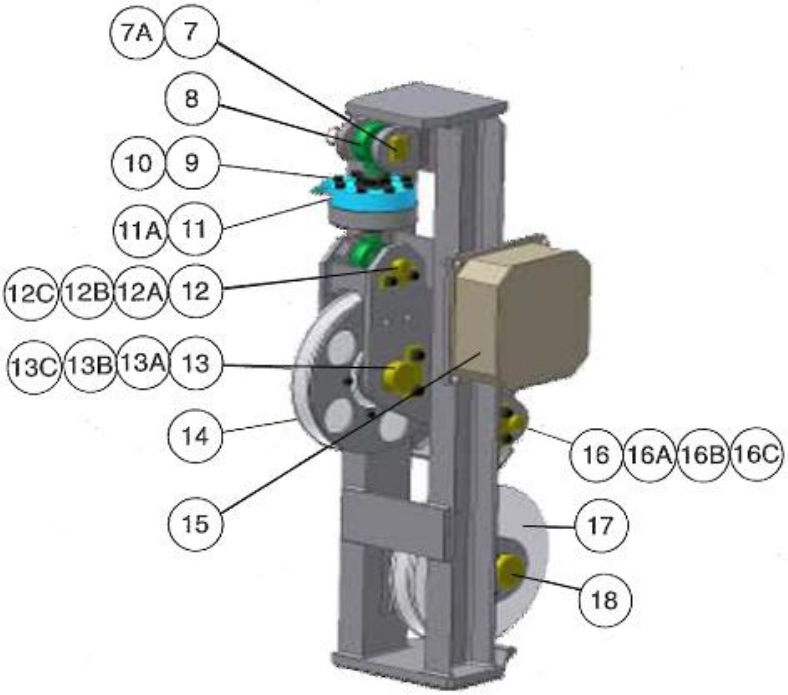

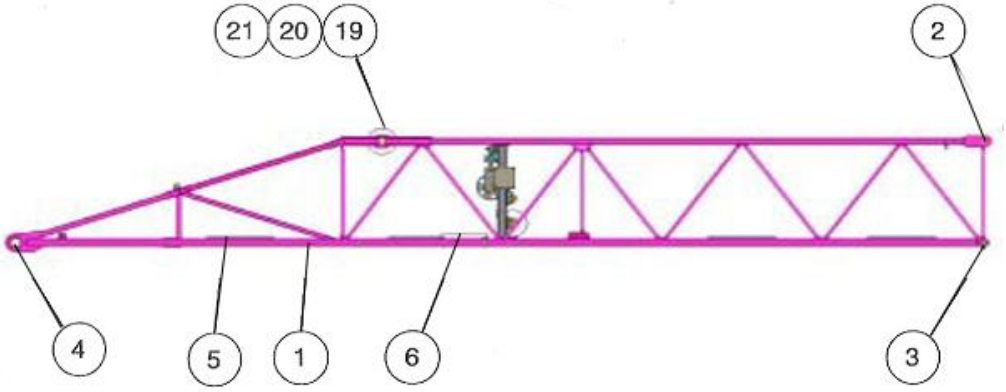

No	Code	Qty	Description & Specification	Remark
	JIB SECTION-1			
1		1	Jib section-1	
2		1	Pin Φ50x120	
3		2	Pin Φ45x97	
4		2	Hinge pin	
5		1	.Catwalk	
6		1	.Catwalk	
7		1	Support Φ28x180	
7a		1	Spring split pin	
8		2	Joint	
9		2	Flat nut	
10		2	Washer	
11		1	Load cell	
11a		8	Screw M10x70 cl.12.9	
12		1	Pin Φ25x125	
12a		1	Pin lock plate	
12b		2	Washer M10	
12c		2	Screw M10x20	
13		1	Pin Φ60x130	
13a		1	Pin lock plate	
13b		2	Washer M12	
13c		2	Screw M12x30	
14		1	Sheave S310x270x110x48	
15		1	Electrical box	
16		1	Pin Φ30x170	
16a		1	Pin lock plate	
16b		2	Washer M12	
16c		2	Screw M12x30	
17		1	Sheave D310x270x110x48	
18		1	Pin Φ60x130	
18a		1	Pin lock plate	
18b		2	Washer M12	
18c		2	Screw M12x30	
19		1	Sheave D310x270x110x48	
20		2	Spacer 75x60.5x3	

21		1	Pin Φ60x115	

JIB SECTION-2

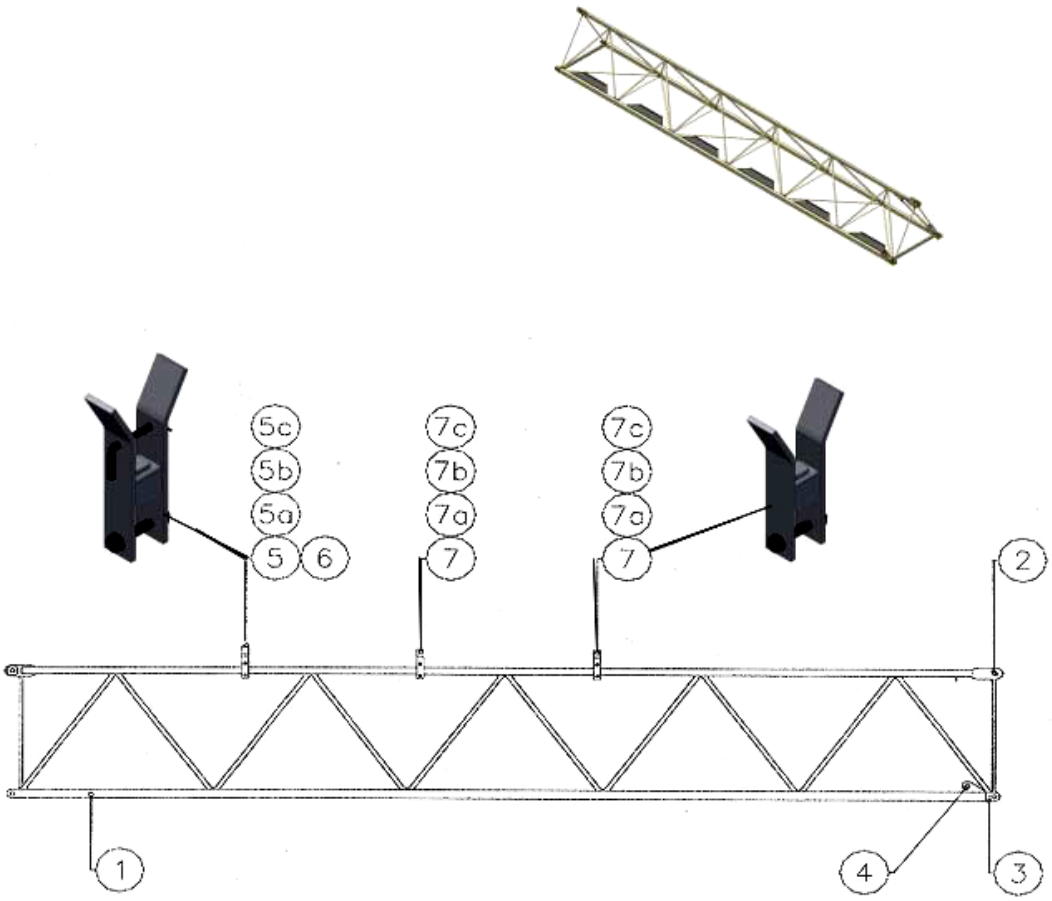

No	Code	Qty	Description & Specification	Remark
	JIB SECTION-2			
1		1	JIB SECTION-2	
2		1	Pin Φ50x120 ZN.TRP.	
3		2	Pin Φ45x97 ZN.TRP.	
4		2	Pin Φ40x95 ZN.TRP.	
5		1	Support-B	
5a		1	Screw M20x130	
5b		1	Tall nut M20	
5c		2	Washer M20	
6		1	Pin Φ16x195	
7		2	Support-A	

7a		2	Screw M20x130	
7b		2	Tall nut M20	
7c		4	Washer M20	

. JIB SECTION-3

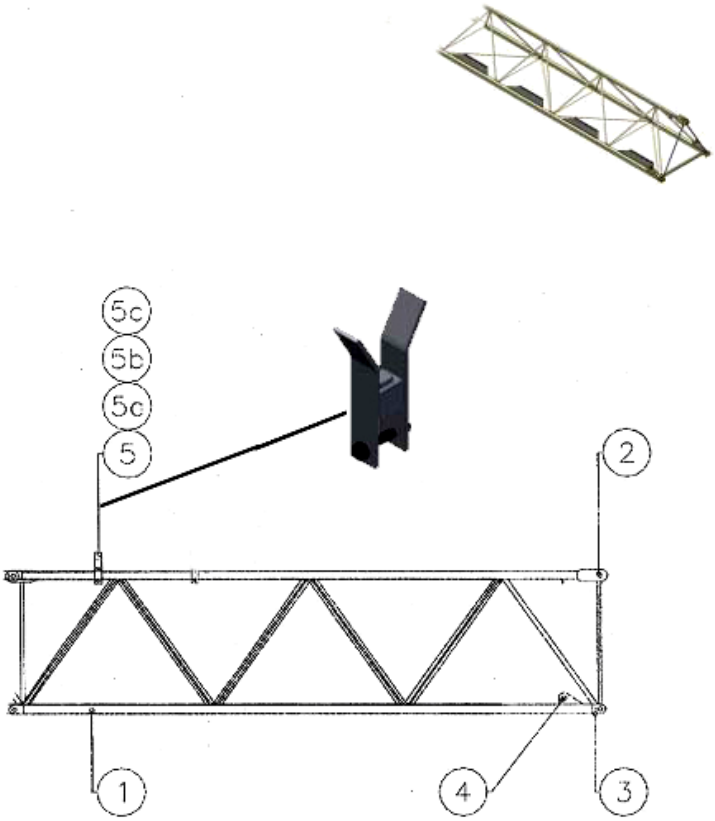

No	Code	Qty	Description & Specification	Remark
			Jib section-3	
1		1	Jib section-3	
2		1	Pin Φ50x120 ZN.TRP.	
3		2	Pin Φ45x97 ZN.TRP.	
4		2	Pin Φ40x95ZN.TRP.	
5		2	Support-A	
5a		2	Screw M20x130	
5b		2	Tall nut M20	
5c		4	Washer M20	

JIB SECTION-7

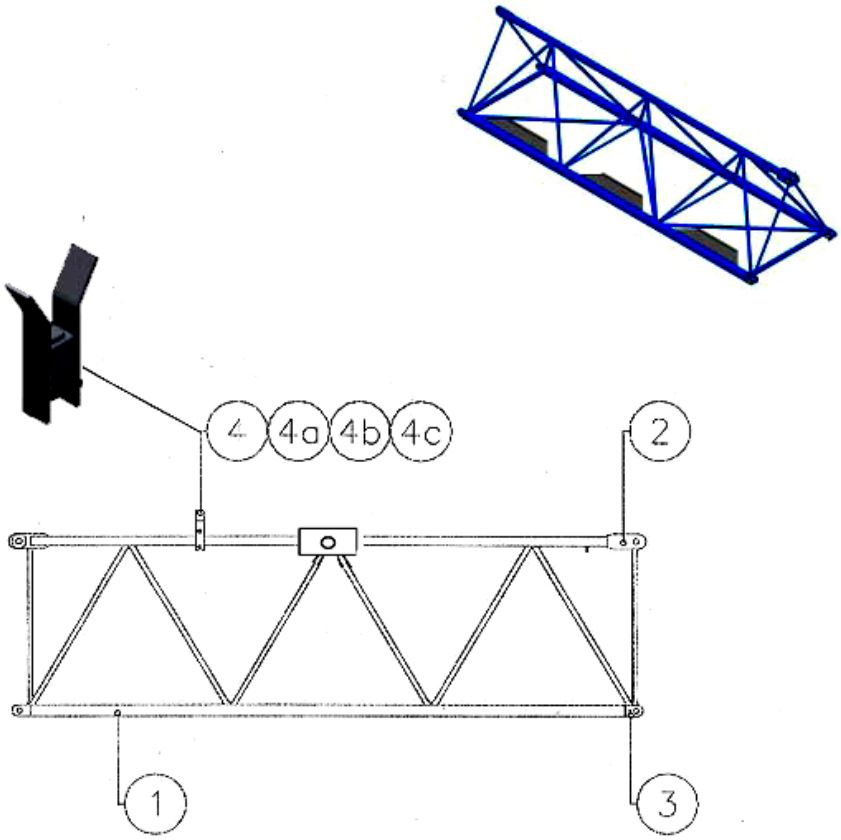

No	Code	Qty	Description & Specification	Remark
			JIB SECTION-7	
1		2	JIB SECTION-7	
2		1	Pin Φ50x120 ZN.TRP.	
3		2	Pin Φ45x97 ZN.TRP.	
4		1	Support-A	
4a		1	Screw M20x130	
4b		1	Tall nut M20	
4c		2	Washer 20	

JIB SECTION-8

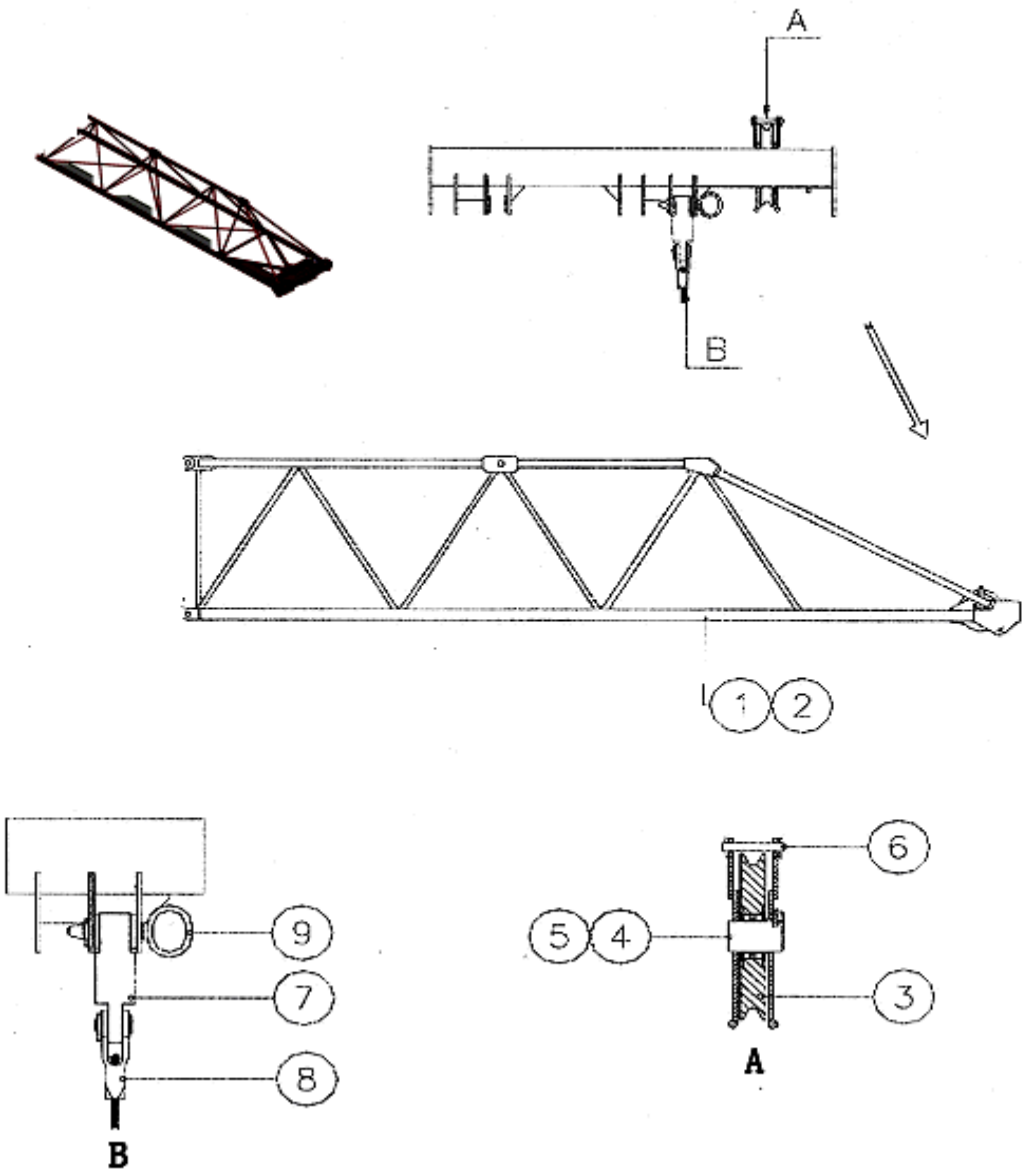

No	Code	Qty	Description & Specification	Remark
			JIB SECTION-8	
1		1	JIB SECTION-8	
2		1		
3		1	Sheave D370x110x54	
4		3	Spacer 71x83x7	
5		1	Pin Φ70X96	
6		1	Rope guide pin Φ20 x114	
7		1	Swivel	

8		1	Terminal bracket	
9		1	Pin Φ30x114	

HOISTING ROPE SUPPORT-A

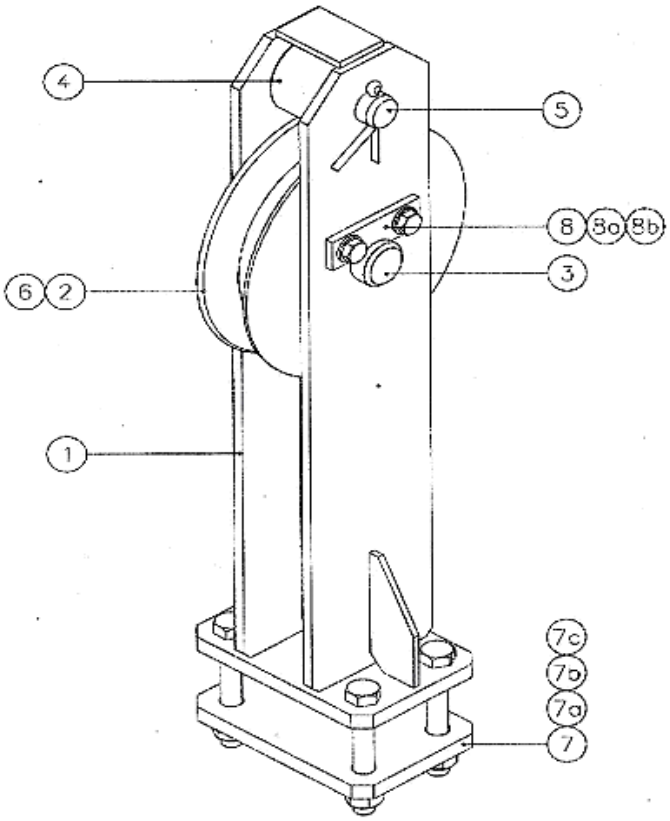

No	Code	Qty	Description & Specification	Remark
			HOISTING ROPE SUPPORT-A	
1		1	SUPPORT-A	
2		1	Sheave/Bearing	
3		1	Pin Φ35x70	
4		1	Roller	
5		1	Pin Φ25x75	
6		2	Spacer	
7		1	Bottom plate	
7a		4	Screw M16x100	
7b		4	Tall nut M16	
7c		4	Washer M16	
8		1	Pin lock plate	
8a		2	Screw M10x16	
8b		2	Washer M10	

HOISTING ROPE SUPPORT-B

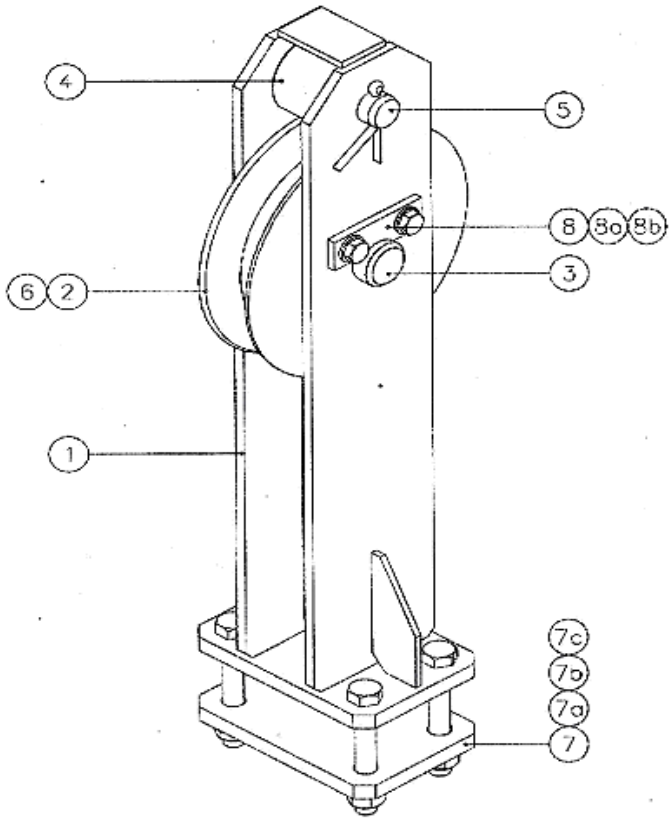

No	Code	Qty	Description & Specification	Remark
			HOISTING ROPE SUPPORT-B	
1		1	SUPPORT-B	
2		1	Sheave/Bearing	
3		1	Pin Φ35x70	
4		1	Roller	
5		1	Pin Φ25x75	
6		2	Spacer	
7		1	Bottom plate	
7a		4	Screw M16x100	
7b		4	Tall nut M16	
7c		4	Washer M16	
8		1	Pin lock plate	
8a		2	Screw M10x16	
8b		2	Washer M10	

JIB POINT PLATFORM

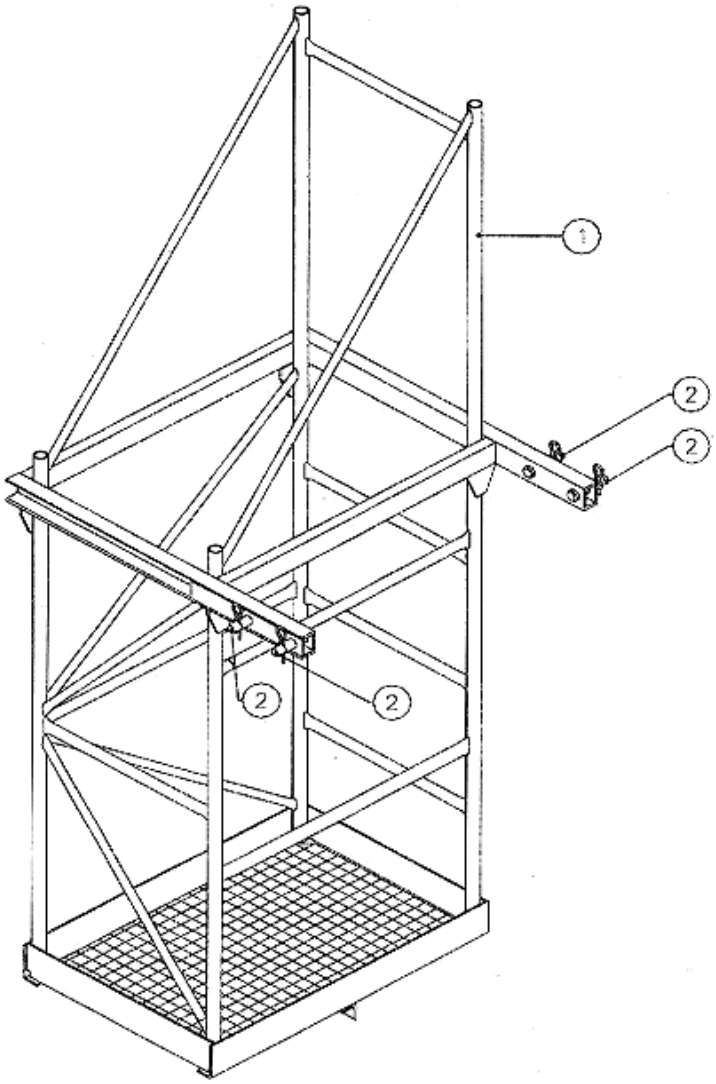

No	Code	Qty	Description & Specification	Remark
			JIB POINT PLATFORM	
1		1	Jib point platform	
2		4	Pin Φ25x70	

TIE-ROPES

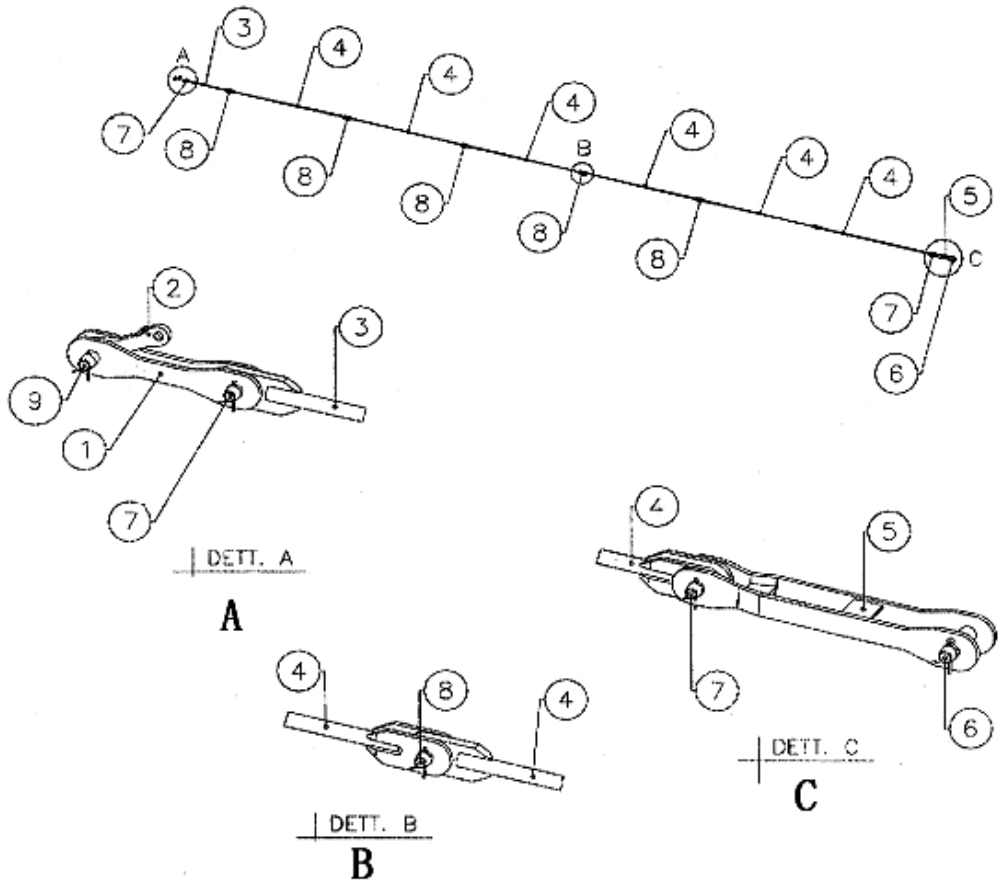

No	Code	Qty	Description & Specification
TIE-ROPES			
1		1	TIE-ROPES A（484mm）
2		1	TIE-ROPES A1（180mm）
3		1	TIE-ROPES B1（1000mm）
4		6	TIE-ROPES B（4950mm）
5		1	TIE-ROPES C（900mm）
6		1	Pin Φ50x158
7		2	Pin Φ50x110
8		6	Pin Φ50x75
9		1	Pin Φ50x160

HOIST BLOCK

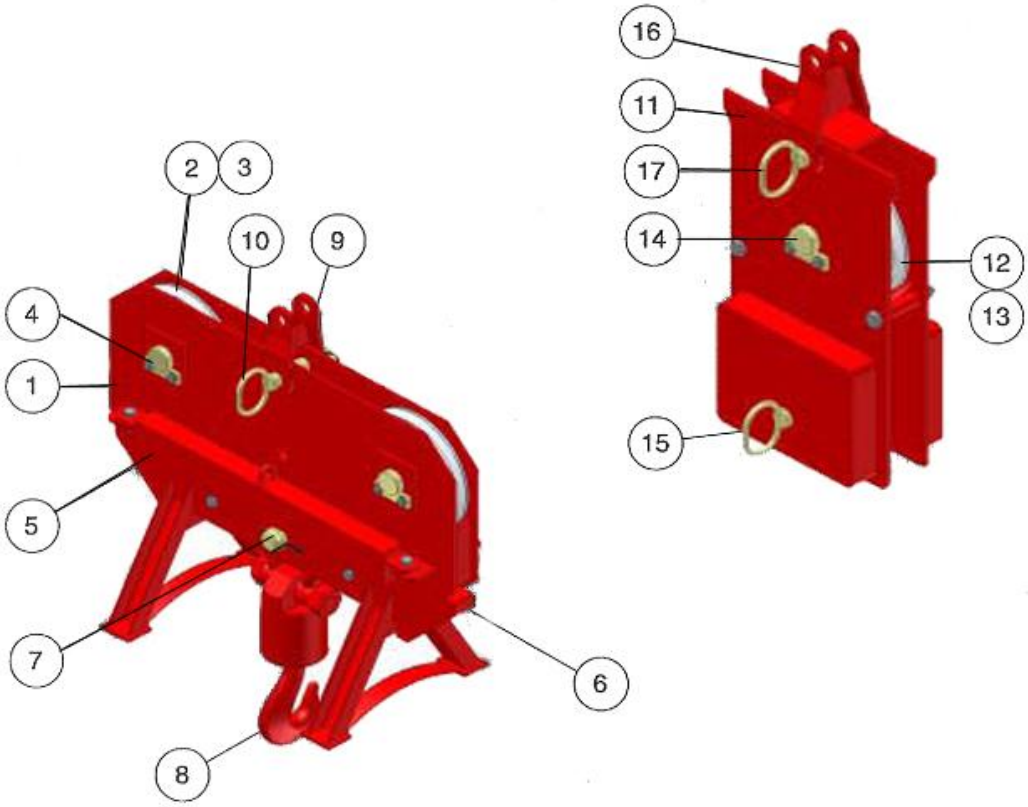

No	Code	Qty	Description & Specification	Remark
			HOIST BLOCK	
1		1	2-part line hoist block	
2		1	Sheave D400x110x54 PA6G	
3		2	Spacer	
4		1	Pin Φ70x120	
5		2	Ballast plate	
6		1	Ballast plate	
7		1	Pin Φ60x155	
8		1	16t- hook	
9		1	3-part line rope terminal mount	
10		1	Pin Φ40x200	
11		1	Hoist block	
12		1	Sheave D400x110x54 PA6G	
13		2	Spacer	
14		1	Pin Φ70x138	
15		1	Pin Φ40x200	
16		1	3-part line rope terminal mount	
17		1	Pin Φ35x195	

SWINGING SLEEPER

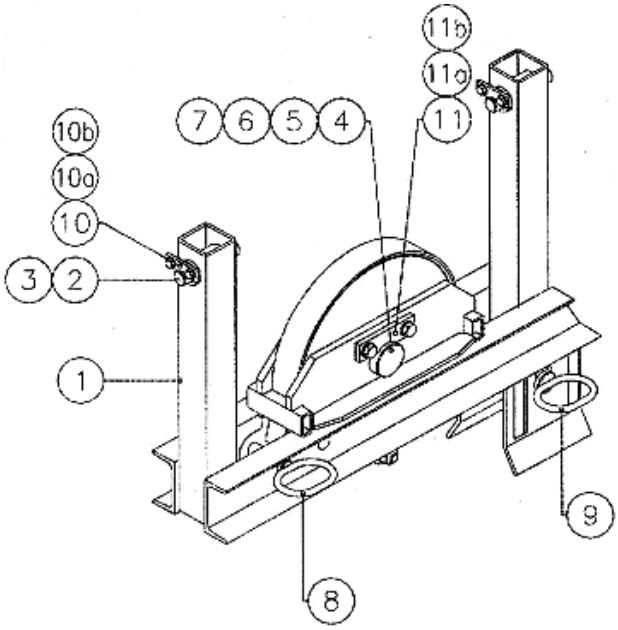

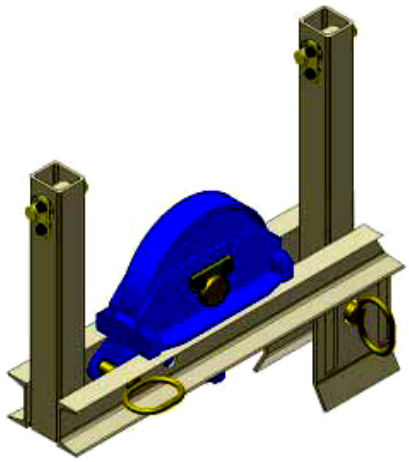

No	Code	Qty	Description & Specification	Remark
			SWINGING SLEEPER	
1		1	SWINGING SLEEPER	
2		2	Pin Φ30x125	
3		4	Bush 30	
4		1	Support	
5		1	Sheave D310x110348	
6		2	Spacer	
7		1	Pin Φ60x83	
8		1	Pin Φ25x96	
9		1	Pin Φ35x119	
10		2	Pin lock plate	
10a		4	Screw M10x20	
10b		4	Washer M10	
11		1	Pin lock plate	
11a		2	Screw M12x25	
11b		2	Washer M12	

3.6.2.1、GROUND ASSEMBLY OF THE JIB

The jib sections are equipped with a metallic identification plate welded on the upper longitudinal spar (picture 2.4.1), showing their code and description (table 2.4.1).

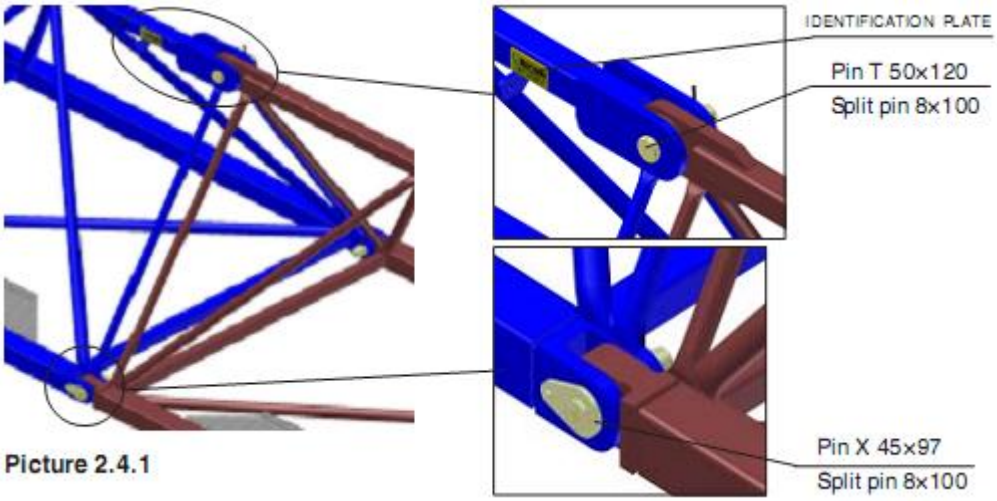

Picture 2.4.1

Code	DESCRIPTION	WEIGHT（kg）
	Jib section1 °	1227
	Jib section2 °	951
	Jib section3 °	503
	Jib section7 °	487
	Jib section8 °	779

Table 2.4.1

The jib sections are pin-connected following the indications of table 2.4.2.

To make their assembly easier, keep the jib sections off the ground with suitable spacers.

JIB SECTIONS	LOWER LONG. SPAR CONNECTION WITH PIN "X-Y"	SPLIT PIN	UPPER LONG. SPAR CONNECTION WITH PIN"T"	SPLIT PIN
Jib section1 ℃to 2 °	No 2 pins Φ45x97	8x100	No 1 pinΦ50x120	8x100
Jib section 2 ℃to 3 °	No 2 pins Φ45x97	8x100	No 1 pinΦ50x120	8x100
Jib section 3 ℃to 3 °	No 2 pins Φ45x97	8x100	No 1 pinΦ50x120	8x100
Jib section 3 ℃to 3 °	No 2 pins Φ45x97	8x100	No 1 pinΦ50x120	8x100
Jib section 3 ℃to 3 °	No 2 pins Φ45x97	8x100	No 1 pinΦ50x120	8x100
Jib section 3 ℃to 7 °	No 2 pins Φ45x97	8x100	No 1 pinΦ50x120	8x100

Jib section 7 °to 8 °	No 2 pins Φ45x97	8x100	No 1 pinΦ50x120	8x100

Table 2.4.2

3.6.2.2、JIB CONFIGURATIONS

The following scheme shows the different jib configurations according to the chosen length.

30m

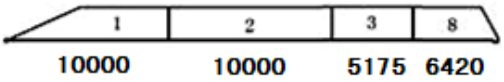

35m

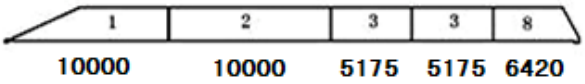

40m

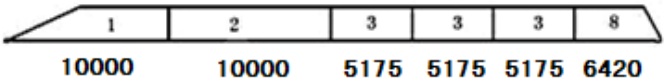

45m

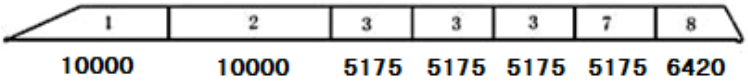

50m

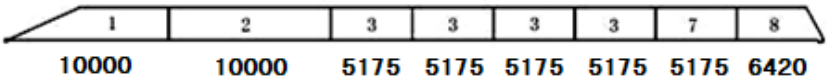

Depending on the jib length installed, assemble between jib section-1 and jib section-6 the safety rope provided with the crane with the special equalizers.

It allows the erectors and/or service engineers to hook themselves along the whole jib length

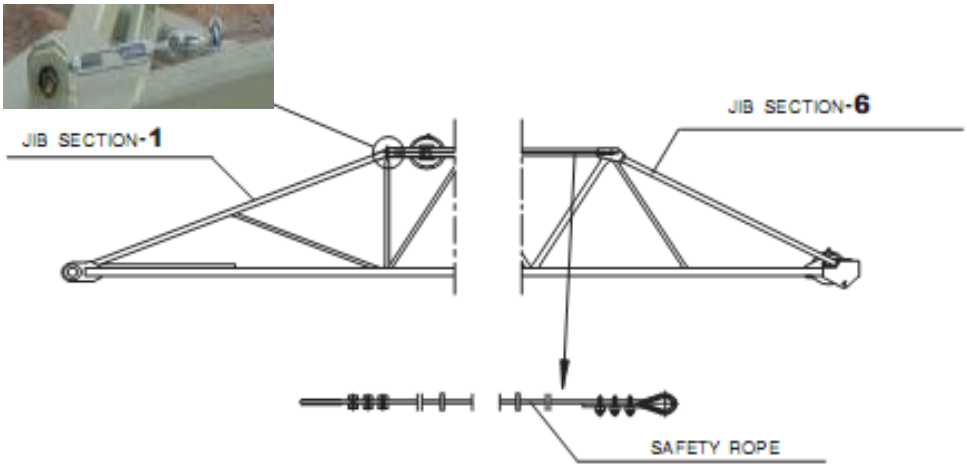

3.6.2.3、POSITIONING THE ASSEMBLY DEVICE FOR MOBILE SHEAVE BLOCK FOR LUFFING ROPE ONJIB SECTION-2

Place and secure the device for the assembly of the mobile sheave block to the upper longitudinal spar of jib section-2 with 4 screws M 24X160 next to the last spans of external diagonal tubes the device allows two assembly positions:

Position 1) as shown in picture 2.4.1 for assembly of the sheave block with the aid of the hoist rope;

Position 2) rotated by 180° as regards picture 2.4.1 for assembly of the sheave block with BRI-HI(rope-trough pulling jack)

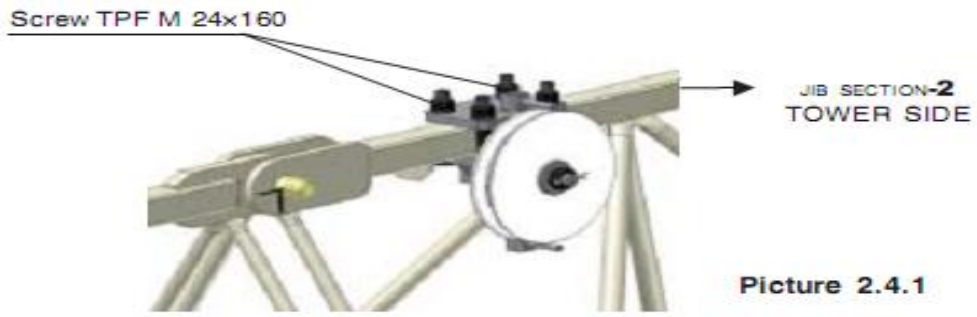

Picture 2.4.1

⚠2.4.1.3 POSITIONING THE TIE-ROPES FOR JIB-ASSEMBLY

The number and positioning of the tie-ropes for jib assembly varies according to the jib length chosen (table 2.4.3):

JTL140	TIE-ROPES FOR JIB ASSEMBLY		
JIB（m）	TIE-ROPE “A”D22 L9600	TIE-ROPE “B”D22 L12600	LOCATION ON JIB SECTION
50	No 2 sections (A-frame head)	No 4 sections (jib)	Jib section-4
45	No 2 sections (A-frame head)	No 4 sections (jib)	Jib section-4
40	—	No 4 sections (2 A-frame + 2 jib)	Jib section-2
35	—	No 4 sections (2 A-frame + 2 jib)	Jib section-2
30	—	No 4 sections (2 A-frame + 2 jib)	Jib section-2

Table 2.4.3

DANGER

To avoid dangerous tension unbalances of the two sets of tie-ropes, you’re requested to strictly attain to the following directions:

-Never exchange the jib assembly tie-bar “A” and “B” of one JTL140 crane with those of another one - even if same model, which may be working at the same job site or be part of your own crane fleet.

Every crane shall be accompanied by its own jib assembly tie-bar equipment in the long run.

Referring to the configuration provided, arrange the proper tie-ropes for the jib length used.

Secure the ends of the tie-ropes in the proper mounts on the right jib section according to the specific jib configuration in use (table 2.4.3) with pins Φ40X95 and split pins 8X100 (picture 2.4.2) Fix them temporarily to the lower longitudinal spars of the jib.

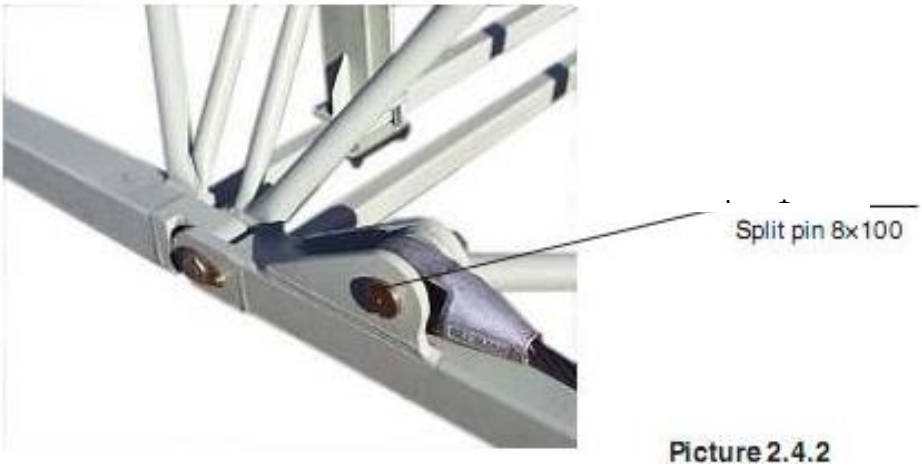

Picture 2.4.2

⚠2.4.1.4 POSITIONING THE SUPPORTS AND JIB TIE-BARS

The quantity and placing of the jib tie-bars with relative supports varies according to the jib configuration chosen (table 2.4.4 and picture 2.4.7):

JTL140	JIB TIE-BAR SUPPORTS								
JIB	JIB TIE-BARS TYPE AND QUANTITY							JIB TIE-BAR SUPPORTS TYPE AND QUANTITY	
LENGTH（m）	SHEAVE BLOCK	A	A1	B1	B	C	JIB POINT	SUPPORT A	SUPPORT B
50	1	1	1	1	6	1	P1	6	1
45	1	1	1	1	5	1	P1	5	1
40	1	1	1	—	5	1	P2	4	1
35	1	1	1	—	4	1	P2	3	1
30	1	1	1	—	3	1	P2	2	1

Table 2.4.4

Representation of mounts position P1_P2 for jib tie-bars at jib point (picture 2.4.3)

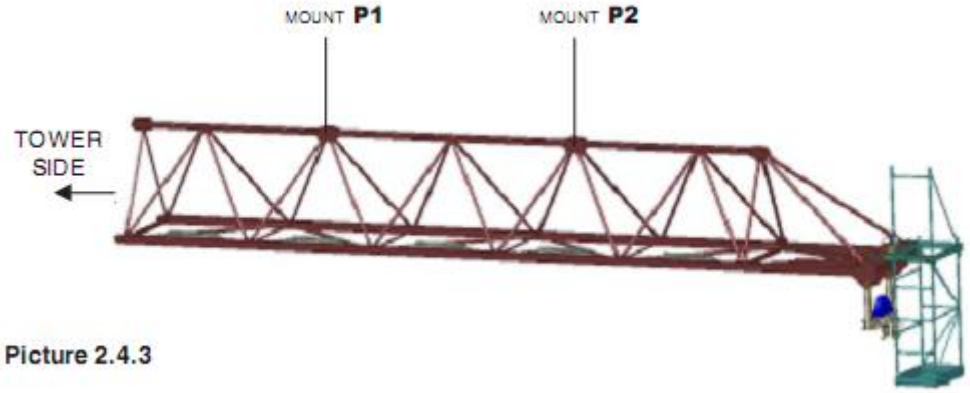

Picture 2.4.3

Pre-assemble the jib tie-bar supports A and B ans secure them to the jib upper longitudinal spars with screws TEPF M20X130 and plane washers M20 (picture 2.4.4, 2.4.5 and 2.4.6) according to the quantity (table 2.4.4) and position (picture 2.4.7) forseen by the specific jib configuration chosen.

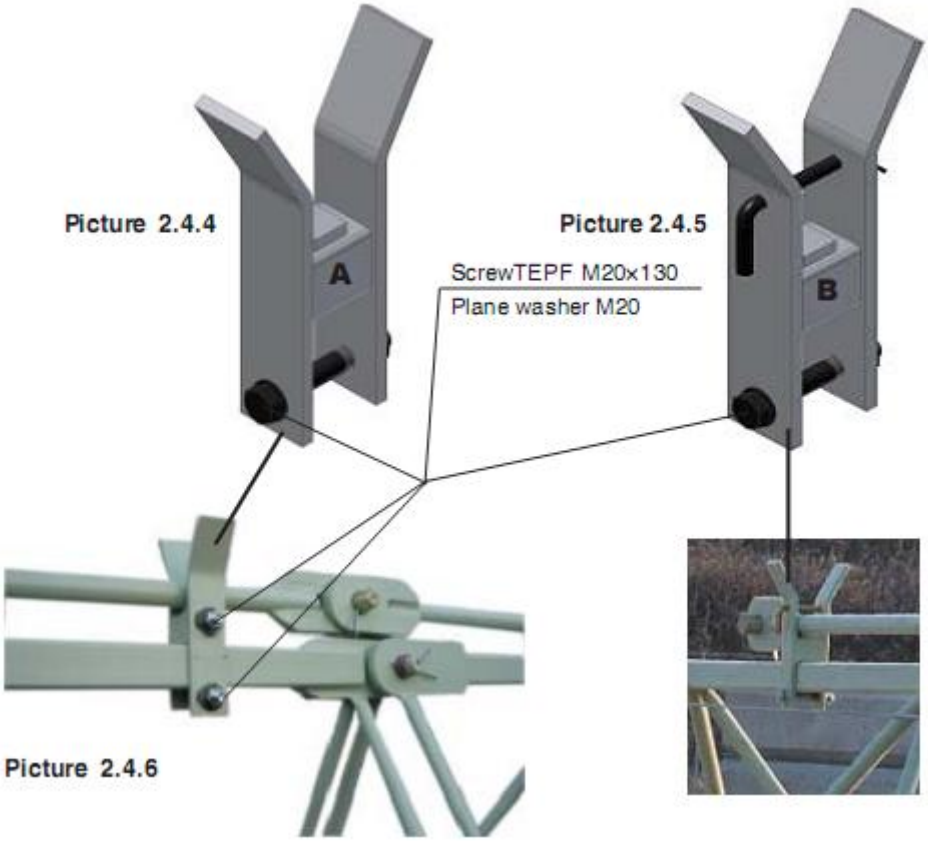
Picture 2.4.4
Picture 2.4.5
A
B
ScrewTEPF M20x130
Plane washer M20
Picture 2.4.6

Assemble the jib tie-bars and pin-connect them respecting the sequence shown (picture 2.4.7):

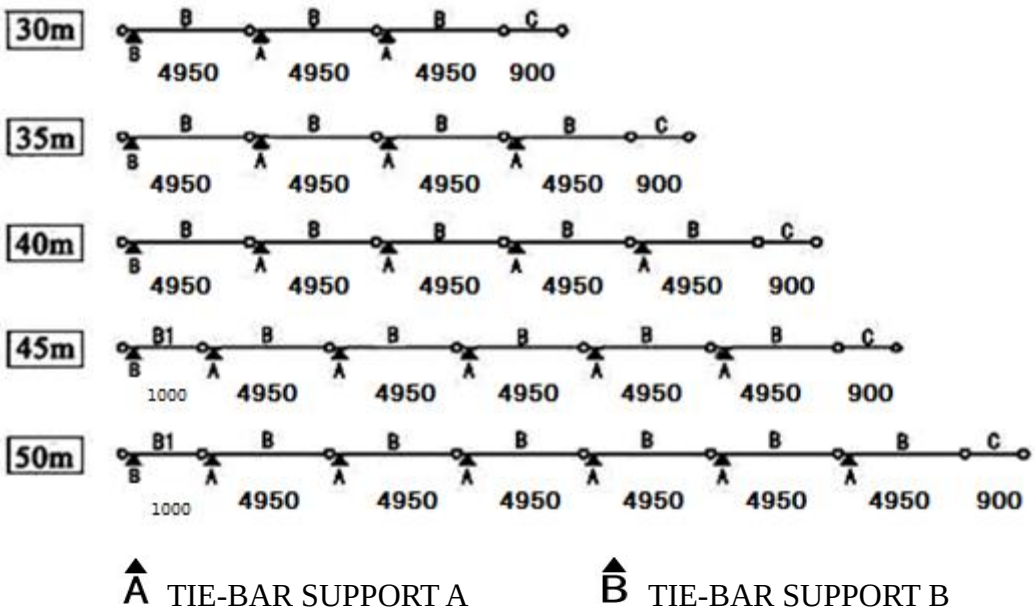

3.6.2.6、POSTIONING THE HOIST ROPE SUPPORTS

The number of the supports for hoisting rope to be assembled depends on the jib configuration chosen (table 2.4.5).

Place them on the cross tubes at the jib bottom (pictures 2.4.8 and 2.4.9) and according to the scheme of picture 2.4.10.

JTL140	SUPPORTS FOR HOISTING ROPE	
JIB	SUPPORT A	SUPPORT B
(m)	（no）	（no）
50	3	1
45	2	1
40	2	1
35	2	1
30	1	1

Table 2.4.5

Picture 2.4.8

Picture 2.4.9

DANGER

Line up the supports according to the direction line of the hoisting rope passing between the load cell lower sheave and the jib point sheave.

Operate as above whichever is the jib configuration chosen, repeating the operation when changing same.

3

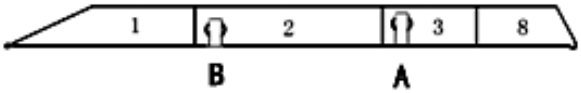

3

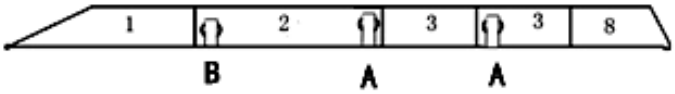

4

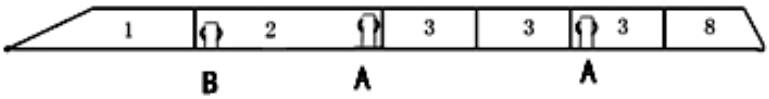

4

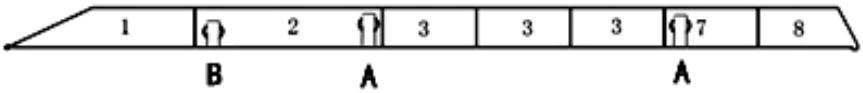

5

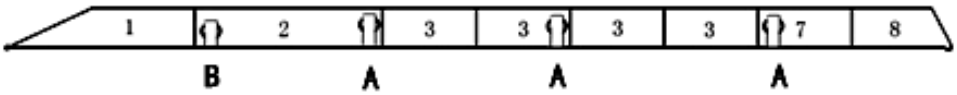

3.6.2.7、 ASSEMBLING THE JIB POINT PLATFORM

Lift the jib until the jib point is about 1.5 m off the ground and hold it in the engaged position by proper mean always placed under a jib knot (picture 2.4.11).

Position the jib point platform on jib section-6 and secure it by 4 pins Φ25X70 and respective spring split pins 5X100 (picture 2.4.12)

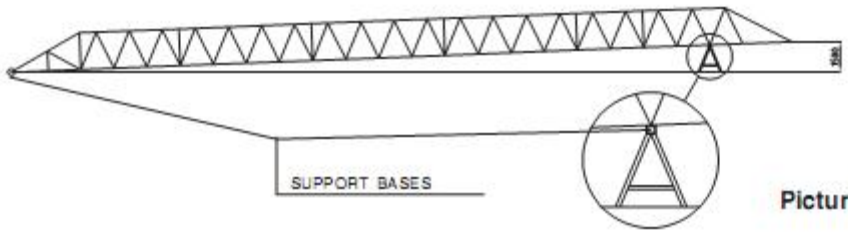

Picture 2.4.11

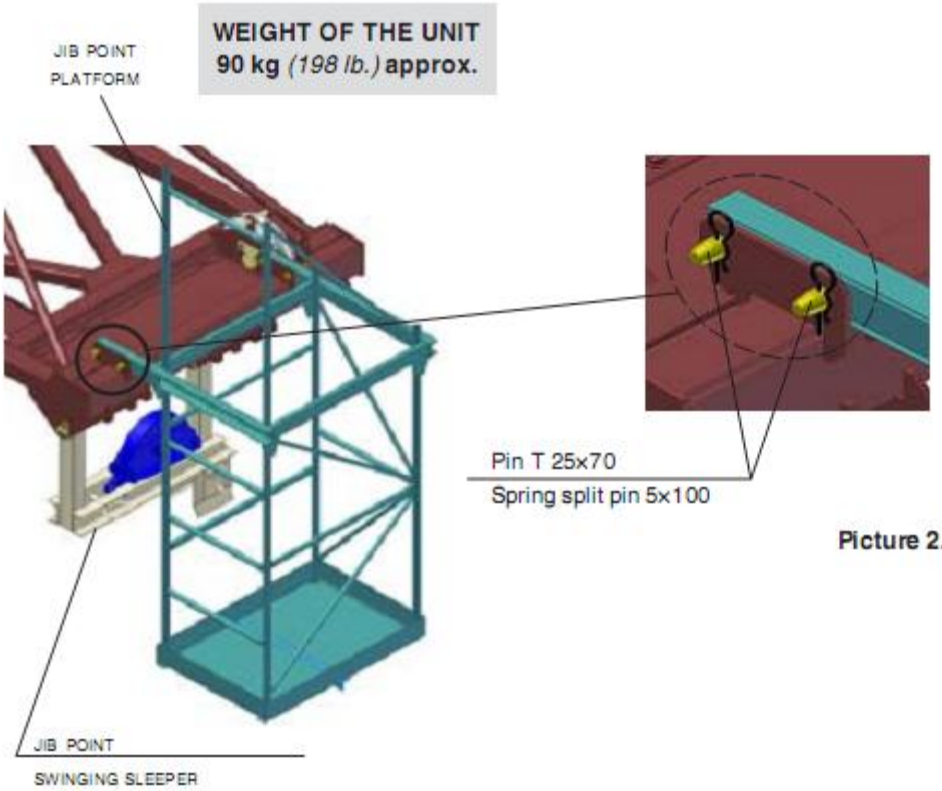

Picture 2.4.12

The jip point swinging sleeper shall be installed only for those jib configurations whichrequire it.

3.6.3、OVERHEAD ASSEMBLY OF THE JIB 、TIE-BAR AND HOOK

3.6.3.1、JIB WEIGHTS AND CENTRES OF GRAVITY

DANGER

In table 2.4.6 locate the centre of gravity point “G” for the jib configuration used (the distance given refer to the jib hinge as starting point).

Sling the jib as shown in picture 2.4.13 and lift it with the slings ALWAYS attached close to the diagonal knots and with an interval of minimum two spans (picture 2.4.14).

Use slings made of fabric with the following features:

-Length 8 m (minimum)

-Strip width 150 mm (minimum)

-Rated load suitable for the load to be lifted

JTL140—APPROXIMATE CENTRES OF GRAVITY	
JIB	GRAVITY
（m）	(m)
50	26.18
45	20.69
40	18.05
35	14.12
30	11.07

Table 2.4.6

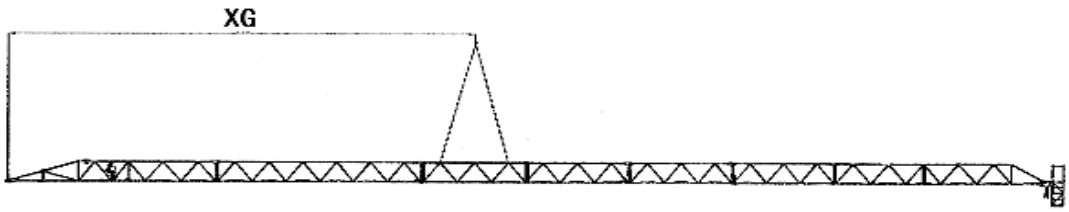

Picture 2.4.13 2.4.13

Data only for reference, according to the actual lifting operation

CAUTION

Perform a functional lifting test and correct the position of the attachment points as to achieve the perfect balancing of the jib. Adjust again as necessary.

The sling attachment points shall be indelibly marked for future crane dismantling.

Picture 2.4.14

3.6.3.2、 ASSEMBLING JIB POINT SWINGING SLEEPER

The swinging sleeper shall be assembled only on 30 to 45 m (98 to 148 ft) jibs for 3- and 2/4 part lines.

If provided by the jib configuration in use but not in place yet, assemble the swinging sleeper at jib point securing it with 2 pins Φ30X120, respective 2 pin-lock plates 25X6X80 and screws M10X20. Make sure to position the sheave holder in position “X” or “Y” for the 3- or 2/4-Part line require (picture 2.4.15).

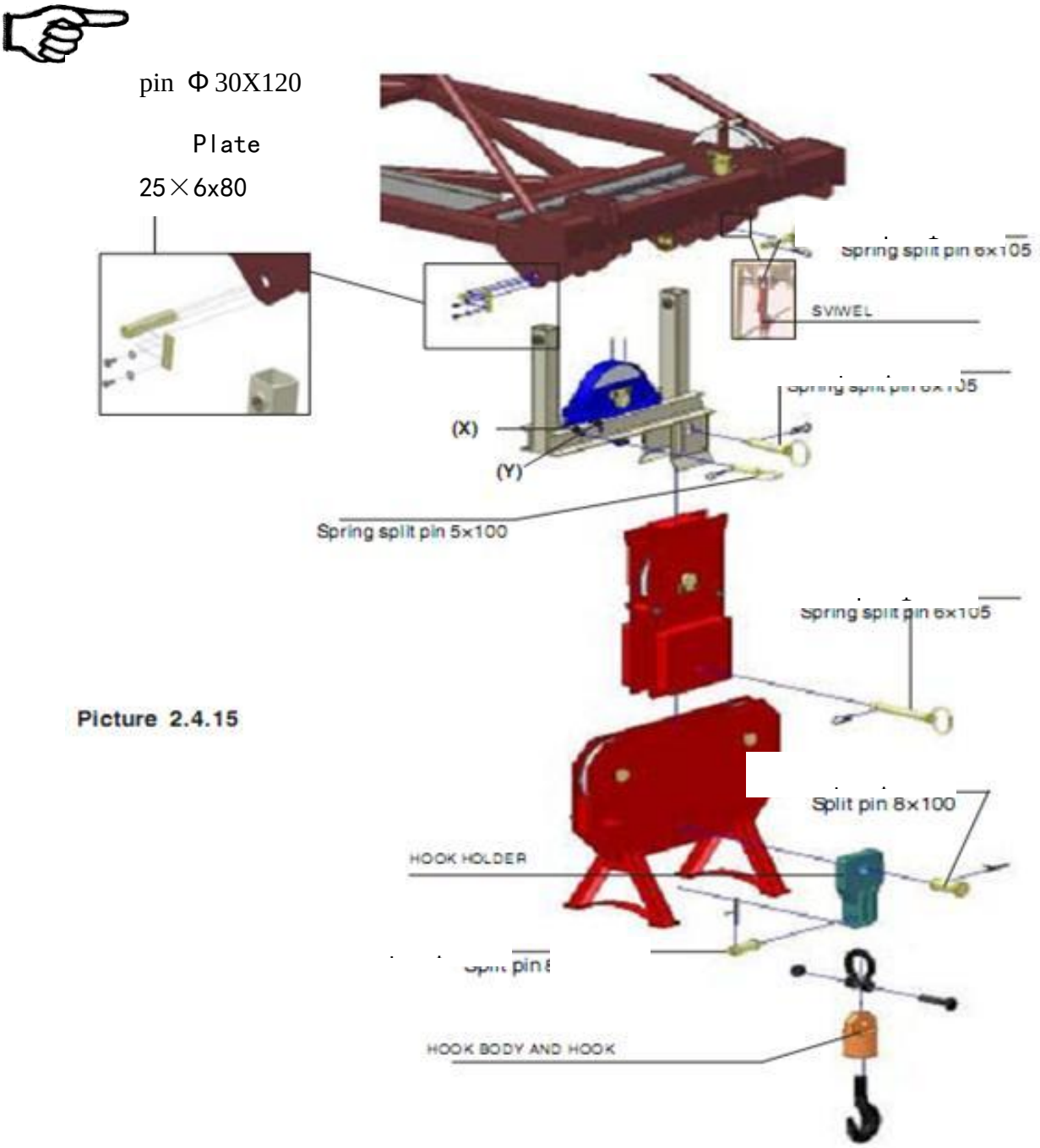

Picture 2.4.15

3.6.3.3、HOIST BLOCKS ASSEMBLY

The hoist blocks can be held hanging at jib point during the crane assembly only with those jib configurations in use as shown in table 2.4.7.

JTL140			
JIB（m）	2-PART LINE 4t SINGLE HOIST BLOCK	3-PART LINE 6 t SINGLE HOIST BLOCK	2/4-PART LINE 4/8 t DOUBLE HOIST BLOCK
50	YES	NO	NO
45	YES	YES	YES
40	YES	YES	YES
35	YES	YES	YES
30	YES	YES	YES

Table 2.4.7

If provided, arrange pin TM 35X155 for assembly of the hoist block suitable for the swinging sleeper according to table 2.4.7 (picture 2.4.15).

3.6.3.4、ASSEMBLING THE JIB ON THE UPPER SLEWING RING SUPPORT

Secure a synthetic rope at jib point to orientate/stabilize the jib lifting/positioning operation.

Lift and place the jib on the upper slewing ring support.

Connect jib section-1 to the upper slewing ring support with the 2 hinge pins 110X220, respective 4 pin-lock plates and 8 screws with washers M16X45 (picture 2.4.16)

Lubricate the hinge using the special lubricator placed on the pin (picture 2.4.16) Connect 2 safety cables for the jib disassembly with 4 pins C 20X55 and spring split pins 4X80 (pictures 2.4.16 and 2.4.17)

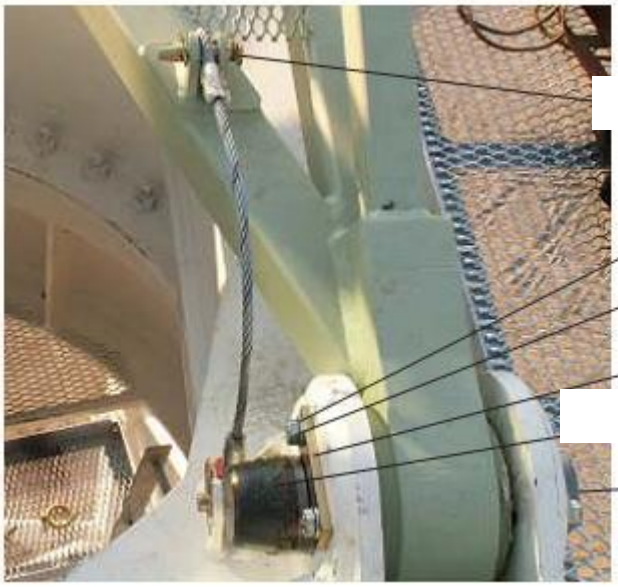

Picture 2.4.16

SAFETYTIE-BARS JTL140

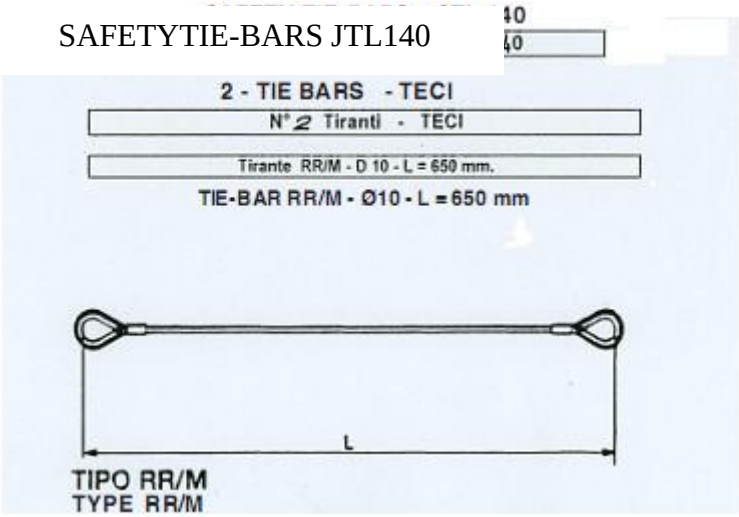

Picture 2.4.17

3.6.3.5、CONNECTING THE TIE-ROPES FOR JIB ASSEMBLY

a) Release the tie-ropes from the temporary attachments on the jib/counterjib A-frame head(picture 2.4.18. and 2.4.18.b).

b) Reeve a hemp rope for the tie-rope lifting through the special tie-rope assembly sheave and secure it on the head of the tie-rope (A-frame location) (picture 2.4.18.c) previously connected to A-frame tie-bar-S2 (picture 2.3.8);

c) Take off the lock pin with split pin (picture 2.4.18.c) and lower the tie-rope (A-frame location)so as to pin-connect the jib assembly tie-ropes with the tie-rope (jib location);

d) Pin-connect the jib assembly tie-rope sections (jib location) already available on the jib (picture2.4.18.a) checking the split pins for good condition;

e) Using the hemp rope lift now the tie-rope (A-frame location) thus allowing its head to engage the tie-bar-S2;

f) Pin-connect again the head of the tie-rope (A-frame location) to the tie-bar-S2 with lock pin and split pin checking the latter for good condition (picture 2.4.18.c);

g) Release the hemp rope from the tie-rope head (A-frame location) and withdraw it from the sheave;

h) Repeat the operations from [b] to [g] points to assemble the second set of tie-ropes;

i) Lower the jib slung by the mobile crane as far as it rests suspension-held by the tie-ropes (picture 2.4.19);

l) Release the jib from the mobile crane sling and indelibly mark -unless already done, the sling attachment points as recommended at para. 2.4.2.1.

The tie-ropes can remain assembled also during the machine’s working phases

Picture 2.4.18.a

Picture 2.4.18.b

JIB TIE-ROPE

TIE-ROPE (A-FRAME LOCATION)

SHEAVE FOR TIE-ROPE ASSEMBLY

TIE-BAR-S2

Picture 2.4.19

HEMP ROPE FOR TIE-ROPE ASSEMBLY

Picture 2.4.18.c

You can apply the tie-ropes for jib assembly after the tie-bar installation, as well (para.2.5.1) observing the operating procedure given above.

3.6.4、COUNTERWEIGHTS ASSEMBLY

Place the remaining 2 counterweights-B (5000 kg) (picture 2.6.1).

Secure the counterweights to the counterjib by the special frame and threaded bars provided (picture 2.6.2).

Picture 2.6.1

Picture 2.6.2

3.7、ROPE REEVING PATH

3.7.1、LUFFING ROPE REEVING PATH

Operate the luffing winch and uncoil the rope up to the end of the rope itself in the back part of the first sheave (on the left, looking at jib point) on the fixed sheave block on the A-frame head(picture 2.5.1 a/b).

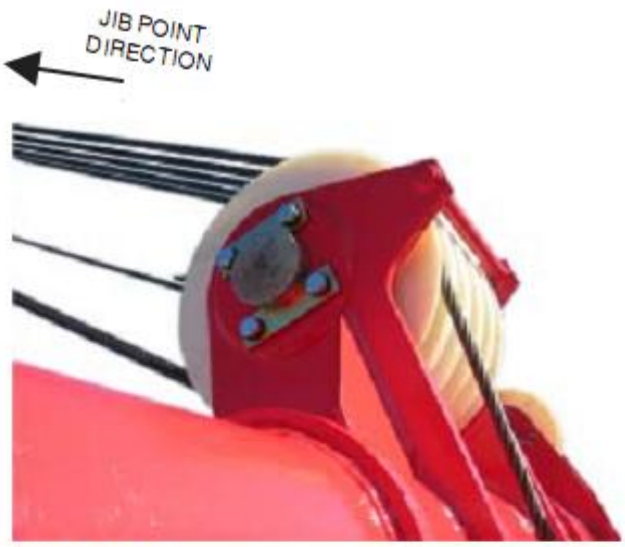

Picture 2.5.1a

Picture 2.5.1b

Turn the rope round the 5 sheaves of the fixed sheave block on the A-frame head and round the 5 sheaves of the mobile sheave block (picture2.5.2).

Assemble the self-locking cable socket at the Φ14 rope end and secure it to the socket lever (picture 2.5.3).

ves of the fixed
ead and round
e block (picture

socket at the
e socket lever

Picture 2.5.2

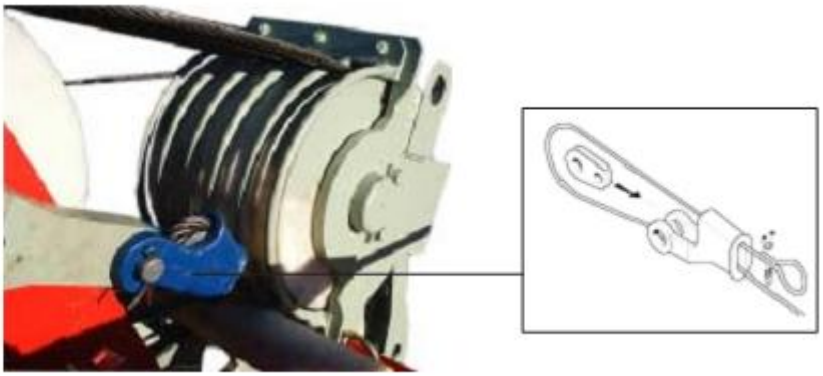

Picture 2.5.3

3.7.1.1、ASSEMBLING THE LUFFING ROPE MOBILE SHEAVE BLOCK AND THE JIB TIE-BARS

Operate the hoist winch and uncoil the rope, make it pass on the sliding sheave on the A-frame head (picture 2.5.4); reeve it then through the 3 sheaves on jib section-1 up to the device for the assembly of the mobile sheave block already in place on jib section-2 (para. 2.4.1.2).

Picture 2.5.4

Assemble the self-locking cable socket at the end of the Φ12 rope and secure it to the mobile sheave block on tie-bar-A1.

Remove pin Φ40X520 connecting the mobile sheave block to the A-frame head and the respective spring split pin 5X100 (picture 2.5.5a and para. 2.3.1- picture 2.3.4).

Lower the mobile sheave block close to jib tie-bar-B1 operating Luffing-downward and load-lifting simultaneously (picture 2.5.5b).

CAUTION

At this stage, an extra operator, placed in the luffing winch area, shall supervise the tie-bars assembly operations.

Connect tie-bar-A to tie-bar-B with pin Φ50X110 and respective split pin 8X100 (picture 2.5.5b) remove pin Φ16X195 and respective spring split pin 4X80(picture 2.5.5c); lift the tie-b-B1;position again pin Φ16X195 and respective spring split pin 4X80 Remove the hoisting rope cable socket from tie-bar-A1 of the mobile sheave block (picture 2.5.5.b).

Fig. 2.5.5a

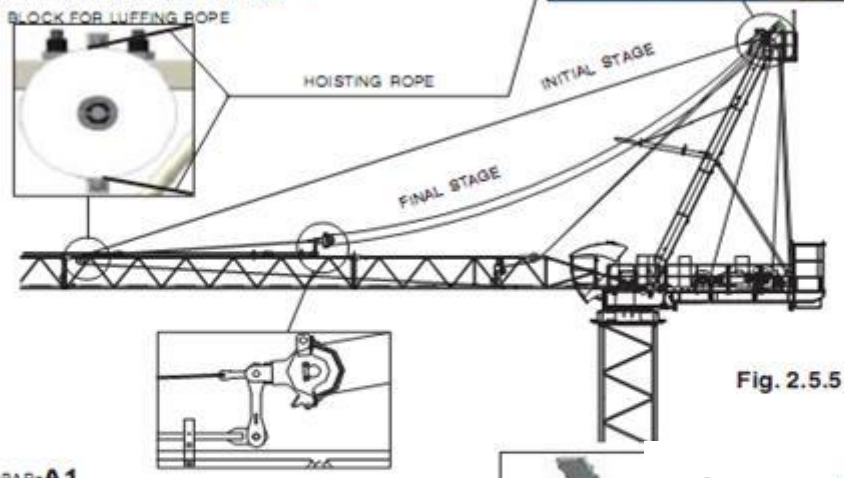

Fig. 2.5.5

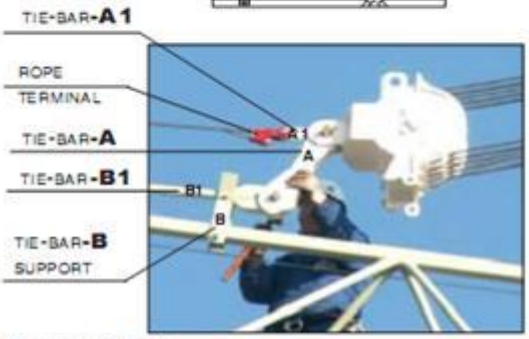

Picture 2.5.5b

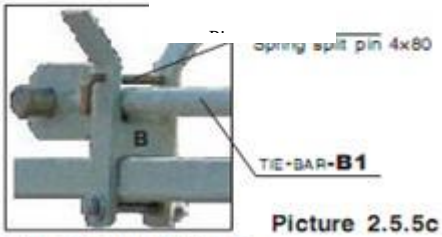

Picture 2.5.5c

IMPORTANT ADVICE

While assembling/disassembling the jib+jib tie-bars, tie-bar-**B1 is held to position** by Pin Φ16X195 and respective spring split pin 4x80 (picture 2.5.5.c)

Operate luffing-upward until the jib tie-bars are properly tensioned (picture 2.5.6)

picture 2.5.6

3.7.1.2 Lifting the tie-bars with “BRI-HIT” (rope-trough pulling jack) devil

It is also possible to place the mobile sheave block on tie-bar-B1 using a rope equipped with “BRI-HIT” device (rope-trough pulling jack) secured to the counterjib A-frame main frame (picture 2.5.7).

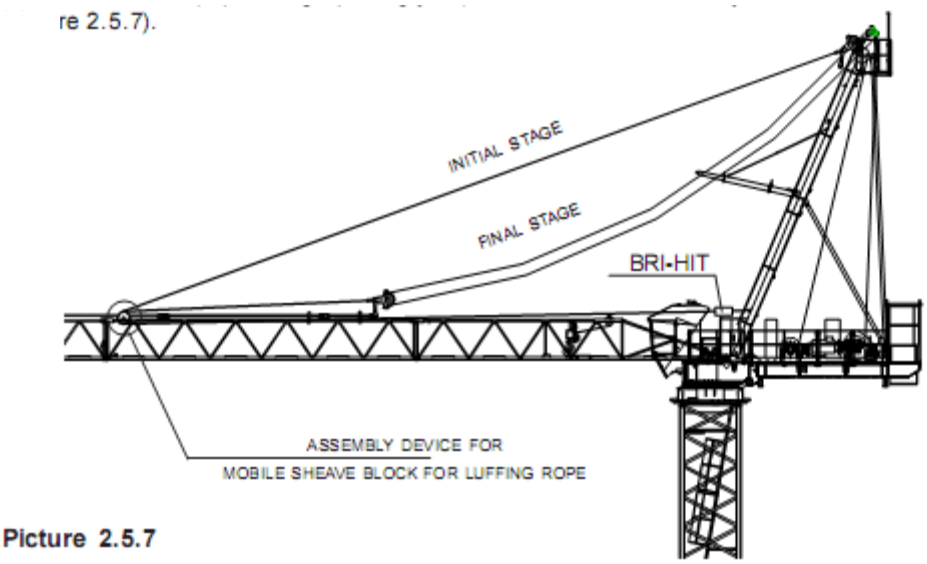

Picture 2.5.7

3.7.2、HOISTING ROPE REEVING PATH

Remove the swivel from the hoist rope end, farla reeve the rope through the proper supports along the jib and on the jib point sheave (picture 2.7.2 a, b, c, d).

With the rope tensioned, check once more the hoist rope supports along the jib for correct alignment.

Make the rope turn round the hoist blocks according to the jib configuration chosen; secure it on the jib point swivel provided (picture 2.7.1).

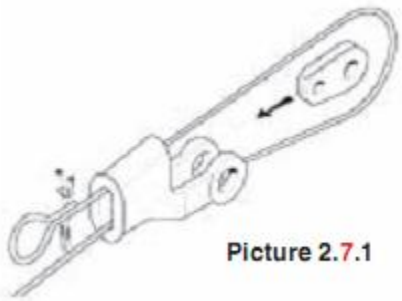

Picture 2.7.1

Picture 2.7.2 - a

Picture 2.7.2 - b

Picture 2.7.2 - c

For the connection of the electrical box with the
"Slewing
quipment
manual.

Picture 2.7.2 - d

3.7.3、HOISTING ROPE “X”-PART LINE REEVING PATH

2-PART LINE 3-PART LINE

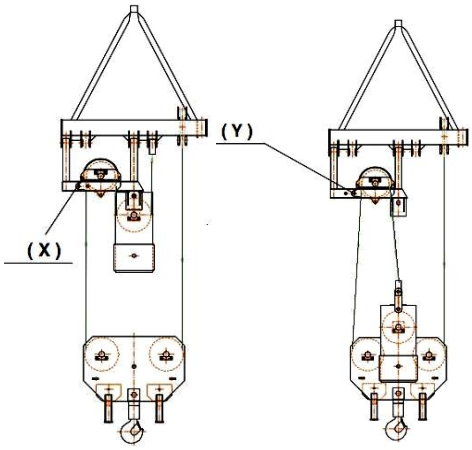

4-PART LINE

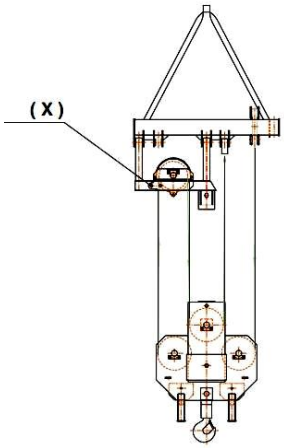

3.8 MAST COMPOSITION

3.8.1 MAST COMPOSITION

This manual specifies the various masts with which the machines stated in the following tables are fitted.

Give details about assembling the masts of 2 m section using shafts.

These mast compositions are valid only for free standing heights on fixin9—angles or on chassis.

For greater heights the mast is generally reinforced at its base.

For climbing cranes，see special brochure.

For all other cases which are not mentioned，consult our After—Sales：Service.

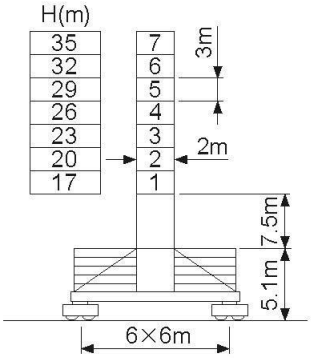

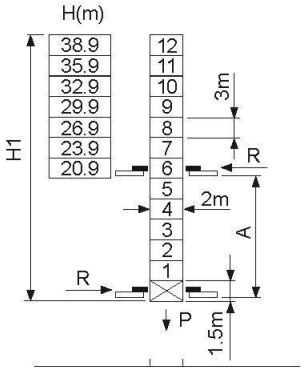

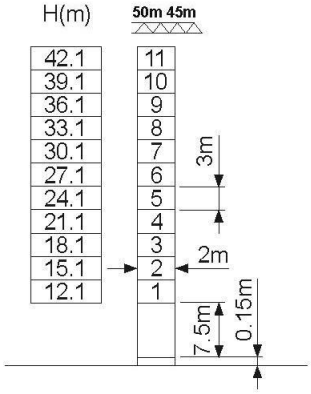

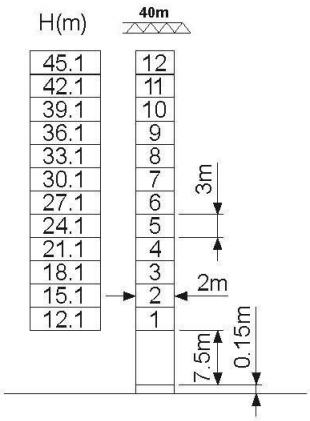

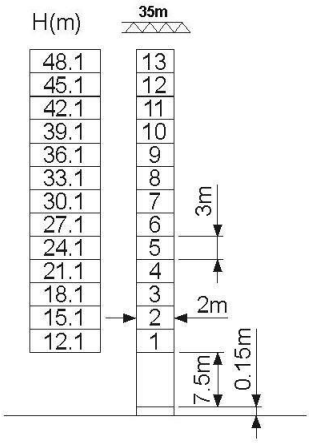

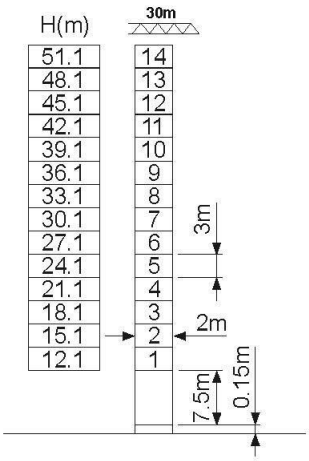

3.8.2 ASSEMBLING THE MAST PANELS

ASSEMBLING THE MAST PANELS:

The L68B2 mast section is make up of 4 panels which have the following identification:

2 panels A of L68B2 mast section (1) and (3)

1 panels B of L68B2 mast section (2)

1 panels C of L68B2 mast section (4)

2 uprights length 1210 6 holes with ladder fastenings (5)

2 uprights length 1210 4 holes (6)

The panels are fitted together by using 12 fishplate bolts (9). The plates are bolted inside the panels; the nuts of the bolts (9) are located on the outside according to Detail A.

On the upper part, the uprights (5) equipped with the ladder fastenings must be fitted opposite one another.

These uprights connect the panels one to the other by means of 16 fishplate bolts (10) and 16 washers (11) according to Detail B.

The connection between the mast sections is ensured by means of 8 headed shafts (7) which are linked two by two using 4 pins (8) and split pins.

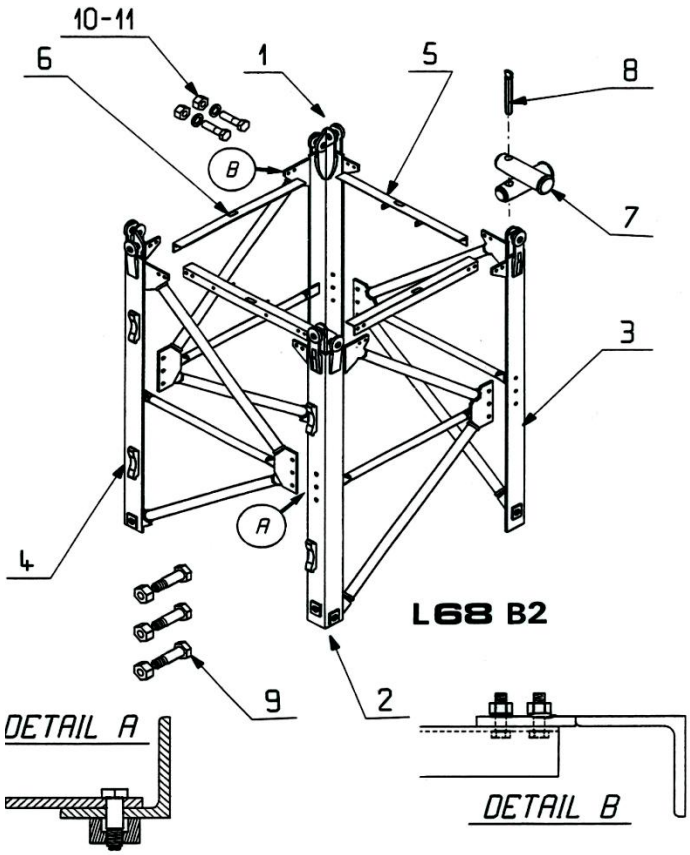
10-11
6
1
5
8
B
7
3
A
4
L68 B2
9
2
DETAIL A
DETAIL B

3.9 FITTING THE ACCESSES

3.9.1 INTRODUCTI0N

The fitting of the accesses in the mast sections is carried out oil the ground}thus allowing， when telescoping， to lift up the complete equipped mast sections onto the introducing rails．

Three access types are used； they comprise：

--Access A： a ladder with back loop

--Access D： a ladder with hack loop and landing—place

--Access E： a ladder with hack loop and platform

Latter， fitted on the last mast section to be telescoped， allows the tower head to be reached．

The table next shows for each crane height the distribution of each of these access types．h should be observed that， when the final working height is attained in several phases， the access of the last mast section will be adapted when telescoping． Live the equipment detail of the various access types.

3.9.2 FITTING THE ACCESSES

All the ladders are fitted on the mast panels equipped with the telescoping lugs.

The A and D accesses must be positioned according to the Instructions given in the following tables.

Note: If there are any special requirements for the fitting of the accesses in certain regions and countries, please consult us.

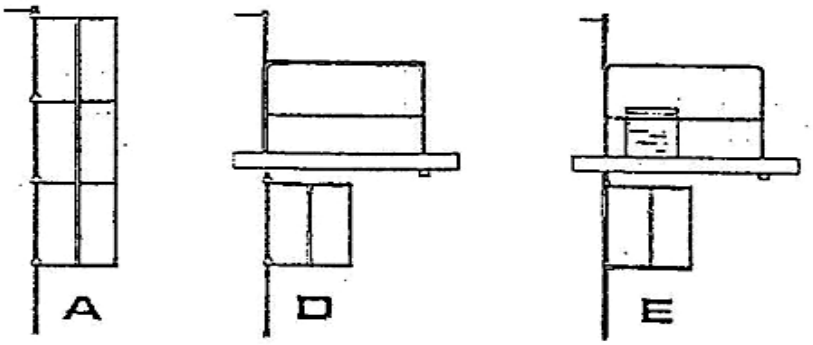

1+27+1																													E
1+26+1																												E	A
1+25+1																											E	D	D
1+24+1																										E	A	A	A
1+23+1																									E	A	A	A	A
1+22+1																								E	D	D	D	D	D
1+21+1																							E	A	A	A	A	A	A
1+20+1																						E	A	A	A	A	A	A	A
1+19+1																					E	D	D	D	D	D	D	D	D
1+18+1																				E	A	A	A	A	A	A	A	A	A
1+17+1																			E	A	A	A	A	A	A	A	A	A	A
1+16+1																		E	D	D	D	D	D	D	D	D	D	D	D
1+15+1																	E	A	A	A	A	A	A	A	A	A	A	A	A
1+14+1																E	A	A	A	A	A	A	A	A	A	A	A	A	A
1+13+1															E	D	D	D	D	D	D	D	D	D	D	D	D	D	D
1+12+1														E	A	A	A	A	A	A	A	A	A	A	A	A	A	A	A
1+11+1													E	A	A	A	A	A	A	A	A	A	A	A	A	A	A	A	A
1+10+1												E	D	D	D	D	D	D	D	D	D	D	D	D	D	D	D	D	D
1+9+1											E	A	A	A	A	A	A	A	A	A	A	A	A	A	A	A	A	A	A
1+8+1										E	A	A	A	A	A	A	A	A	A	A	A	A	A	A	A	A	A	A	A
1+7+1									E	D	D	D	D	D	D	D	D	D	D	D	D	D	D	D	D	D	D	D	D
1+6+1								E	A	A	A	A	A	A	A	A	A	A	A	A	A	A	A	A	A	A	A	A	A
1+5+1							E	A	A	A	A	A	A	A	A	A	A	A	A	A	A	A	A	A	A	A	A	A	A
1+4+1						E	D	D	D	D	D	D	D	D	D	D	D	D	D	D	D	D	D	D	D	D	D	D	D
1+3+1					E	A	A	A	A	A	A	A	A	A	A	A	A	A	A	A	A	A	A	A	A	A	A	A	A
1+2+1				E	A	A	A	A	A	A	A	A	A	A	A	A	A	A	A	A	A	A	A	A	A	A	A	A	A
1+1+1			E	D	D	D	D	D	D	D	D	D	D	D	D	D	D	D	D	D	D	D	D	D	D	D	D	D	D
1+0+1	E	A	A	A	A	A	A	A	A	A	A	A	A	A	A	A	A	A	A	A	A	A	A	A	A	A	A	A	A
1+	+0	+1	+2	+3	+4	+5	6	+7	+8	+9	+10	+11	+12	+13	+14	+15	+16	+17	+18	+19	+20	+21	+22	+23	+24	+25	+26	+27	

3.9.3 FITTING THE ACCESSES

A　ACCESS

Put the mast section upright.

Fit the ladder support(1)on the mast gussets usingφ10 shaft(2)；split—pin.

Cheek that the ladder ends(3)are clean(no earth or other matters in the holes)and not crooked.

Manually introduce the ladder(with the back loops folded hack)into the mast section.

Position the ladder top onto the ladder support(1). Introduce the two fixing brackets(4)，insert wedges(5)，drive them in and bend the ends(6)outwards.

Unfold the back loops(7).

In order to prevent the ladder from swinging in the mast when fittin9，block it using a cord or a steel wire.

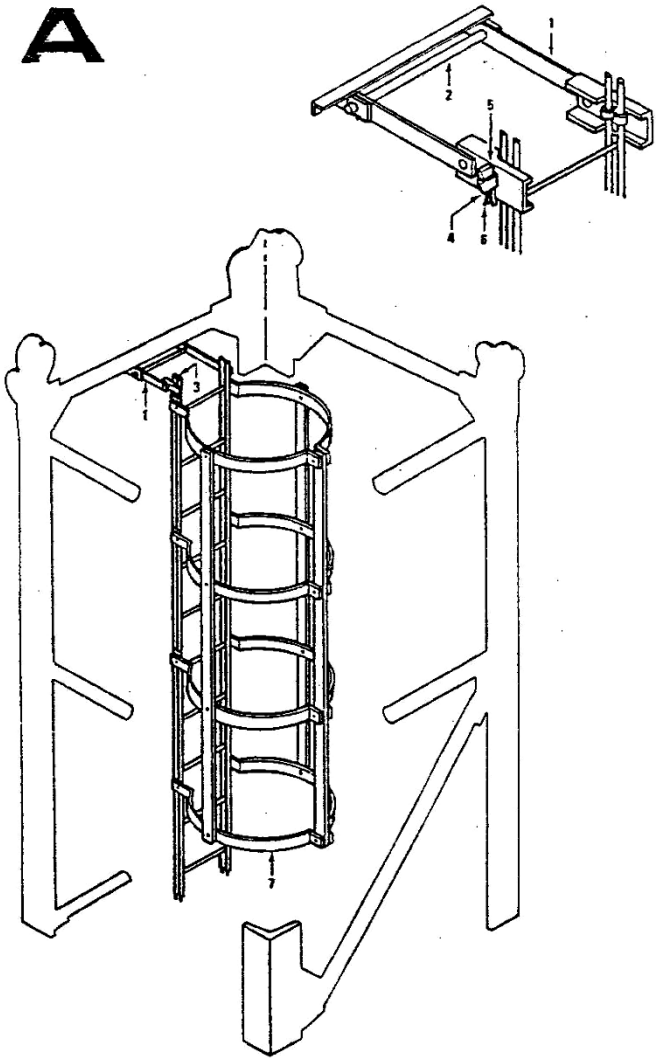

D　ACCESS

Put the mast section upright．Then fit the ladder support (1) on the mast gussets using φ10 shaft(2)；split—pin．

Checks that the ladder ends (3) are clean (no earth or other matters in the holes) and not crooked.

Manually introduce the ladder(with the back loops folded back)into the mast section．

Position the ladder top onto the ladder support(1)，Introduce the two fixing brackets(4)，insert wedges(5)，drive them in and bend the ends (6)outwards．

Unfold the back loops(7)．

Fit the landing—place(8)in the mast section(opening on the ladder side)using clamps(9)and bolts(10)．Fit the grab rails．

In order to prevent the ladder from swinging in the mast when fitting，block it using a cord or a steel wire

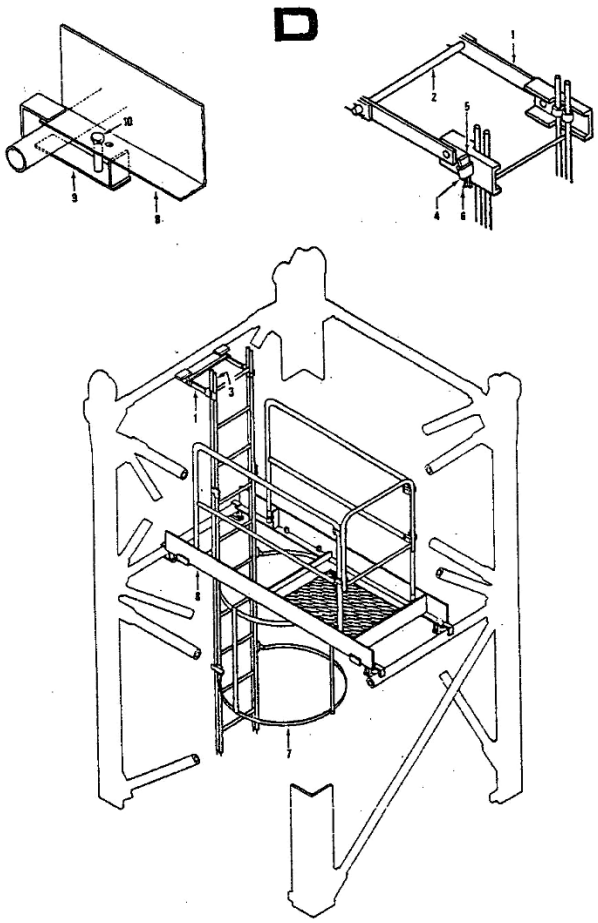

E ACCESS

Place the mast section upright.

Then fit the ladder support(1) and (2) on the mast gussets using φ10 shaft(3)； split—pin

Checks that the ladder ends (4) are clean (no earth or other matters in the holes) and not crooked.

Manually introduce the ladder(5)(with the back loops folded back)into the mast section.

Position the ladder (5) top onto the ladder support (1).

Introduce the two fixing brackets(6)，insert wedges(7)，drive them in and bend the ends (8)outwards.

Unfold the back loops(9).

Fit the platform (10) in the mast section using clamps (11) and bolts (12). Opening on the ladder side (5)

The escalator (13) into the lower platform (10), and its top fixed to the escalator stent (2), the fixed program with the escalator stent (1) at a fixed escalator (5) the same.

In order to prevent the ladder (5)from swinging in the mast when fitting， block it using a cord Or a steel wire.

E

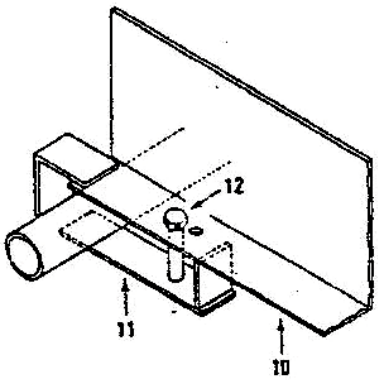

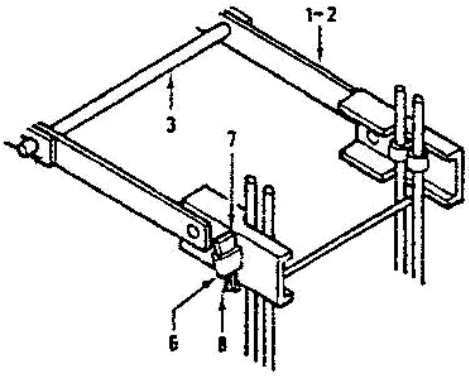

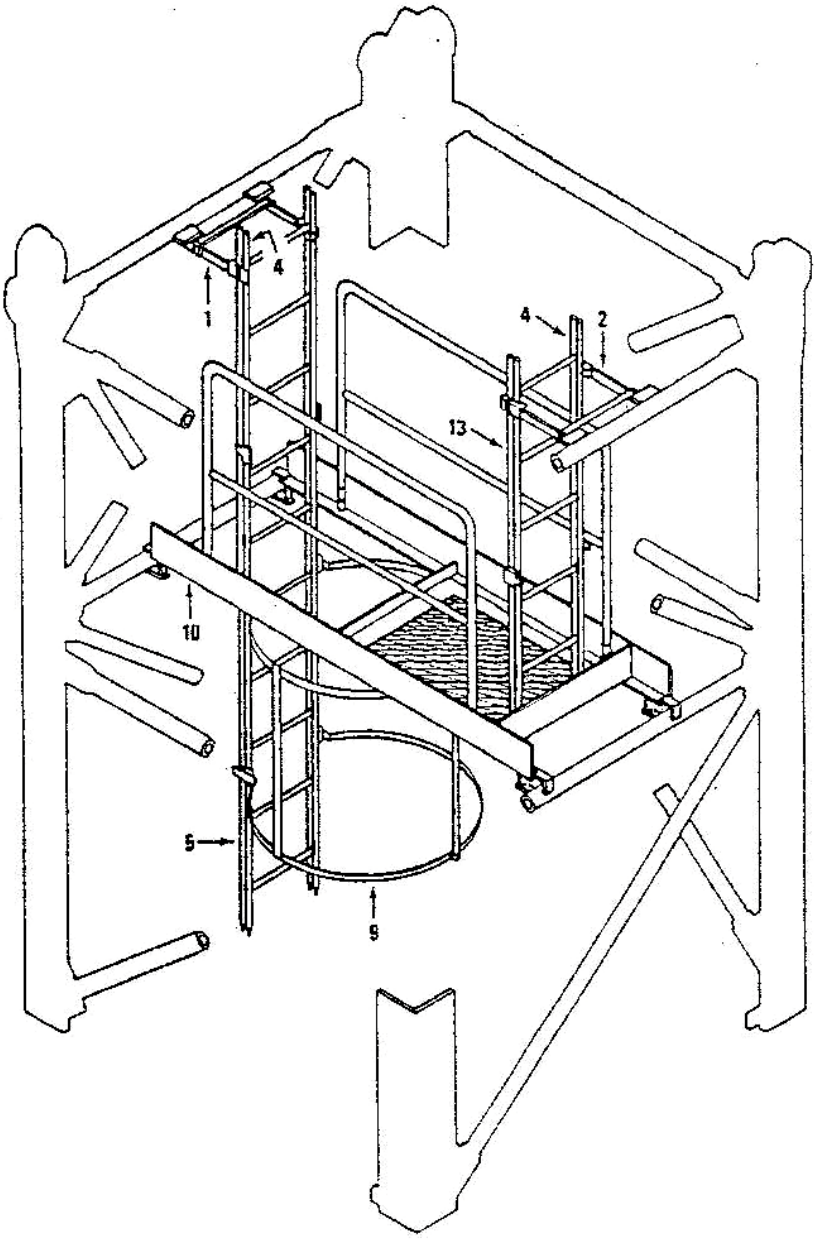

3.10 PREPARING THE TELESCOPING

3.10.1 PREPARING THE TELESCOPING

3.10.1.1 INTRODUCTION

Preparation for telescoping consists of placing the accessories required for telescoping.

The accessories are specific to particular crane types.

Most are placed during fitting of the relevant crane part without being ready to work as such

These operations necessary either after erection or for a height increase are described.

How to put the hydraulic unit into service is given.

These appliances are tested and guaranteed by the constructor. In the case of serious breakdown, it is preferable to contact our After—Sales—Service rather than to carry out a faulty repair which could be dangerous and cancel the guarantee.

3.10.1.2 FITTING THE TELESCOPING EQUIPMENT

3.10.1.2.1 telescoping yoke 1get ready

Telescoping cage along mast go up or go down, must positioning the telescoping yoke.

Use a double rope sling length ， Standards in order to guide the beams snapping Festival (detail A).

Bring the telescoping yoke to the right of a set of lugs and lock it

Hang it on the lugs by means of the locking shoes(4), should the occasion arise, using plate(5), plate fixing locking shoes by bolt (6)(detail B).

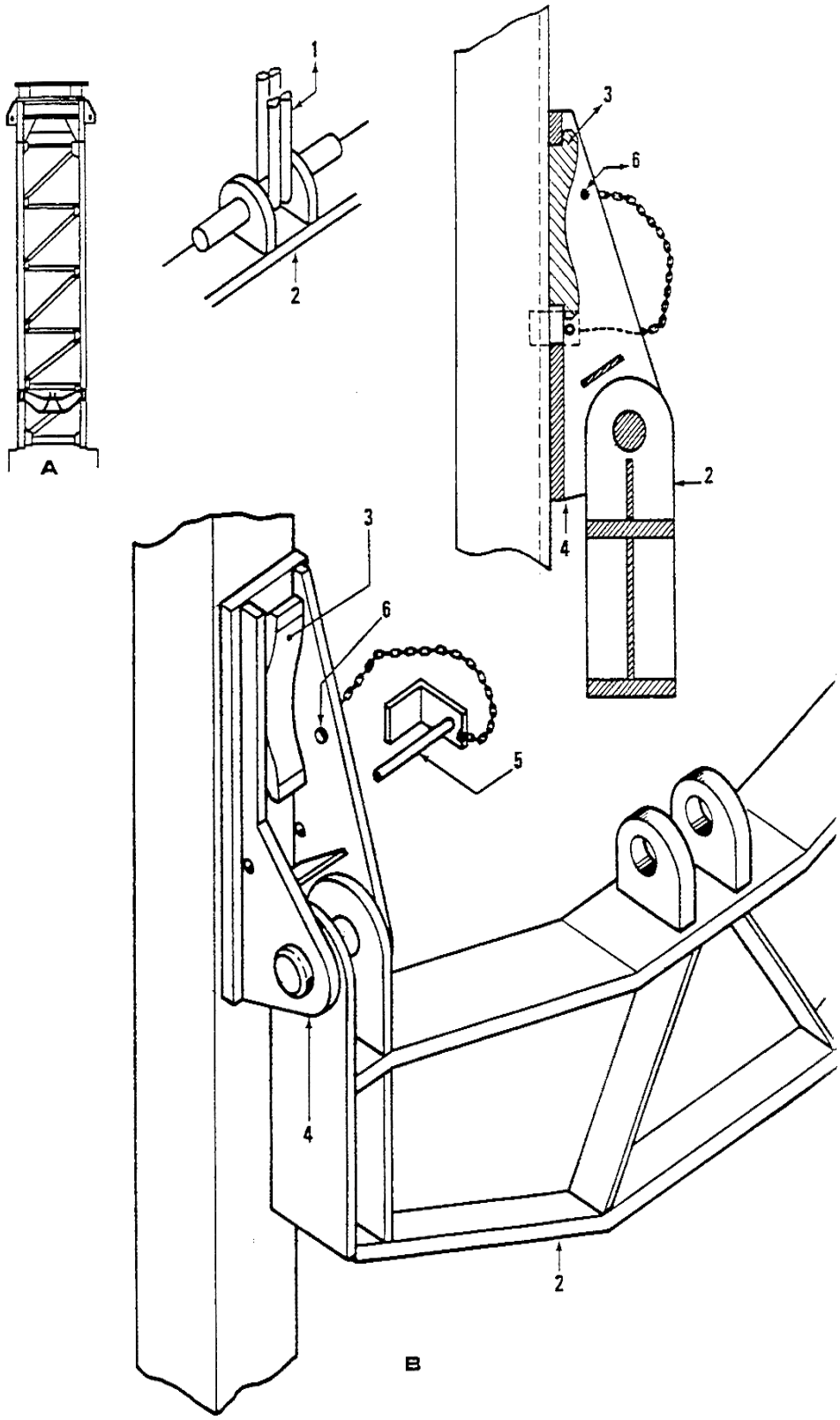
A
1
2
3
6
2
4
3
6
5
4
2
B

3.10.1.2.2、 TABLE OF TELESCOPING ACCESSORIES

Telescoping cage	Hydraulic Group
Telescoping Yoke	Hydraulic Ram
Monorail	Pressure to be Observed
Telescoping Hook	

2M	
Telescoping cage	H18.1
Telescoping Yoke	H18.2.3
Monorail	H18.1.26
Telescoping Hook 24T	H18.1.25
Hydraulic Group	YG-6
Hydraulic Ram	YZ-6
Pressure to be Observed	350b

3.10.1.2.3 TELESCOPING ACCESSORIES GET READY

3.10.1.2.3.1 Positioning the telescoping cage

Two cases may occur：

During normal erection：

Put the hydraulic system into service following Operating Instructions．

Lock the telescoping yoke to the lugs.

By means of the cylinder，raise the cage to fix it to the tower head (detail A)．

For a height increase or dismantling：

Place the accessories(hydraulic group，cylinder，telescoping yoke)，if they had been dismantled．

Use a sling φ15．1 length 4 m，which surrounds the rear beam of the cage al the level of the cylinder fixation(detail B)．

Using the crane，raise the cage and fix it to the tower head．

ATTENTION：During this procedure，observe the cage rising as well as the passing of the telescoping yoke at the level of the mast lugs in order to avoid any blocking likely to cause an accident．

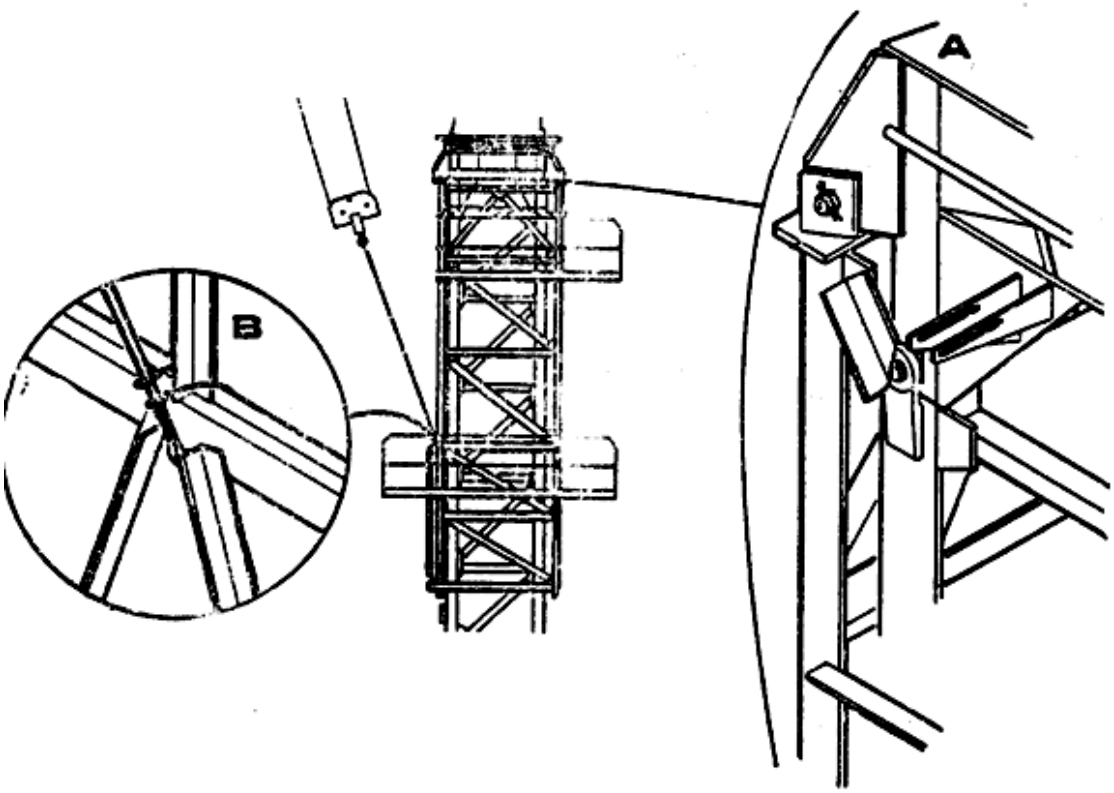

3.10.1.2.3.2 POSTTIONING TELESCOPING YOKE

This operation is carried out when the telescopic cage is rigidly fitted to the tower head or resting on the mast lugs.

Place，in using conditions，the hydraulic system(see Operating Instructions．)

Pin the telescoping yoke to the cylinder.

Bring the telescoping yoke to the right of a set of lugs and lock it：

for l．6 m mast，with the device provided(1)(detail A).

for 2 m mast．hang it on the lugs by means of the locking shoes(2)，or should the occasion arise，using plate(3)(detail B).

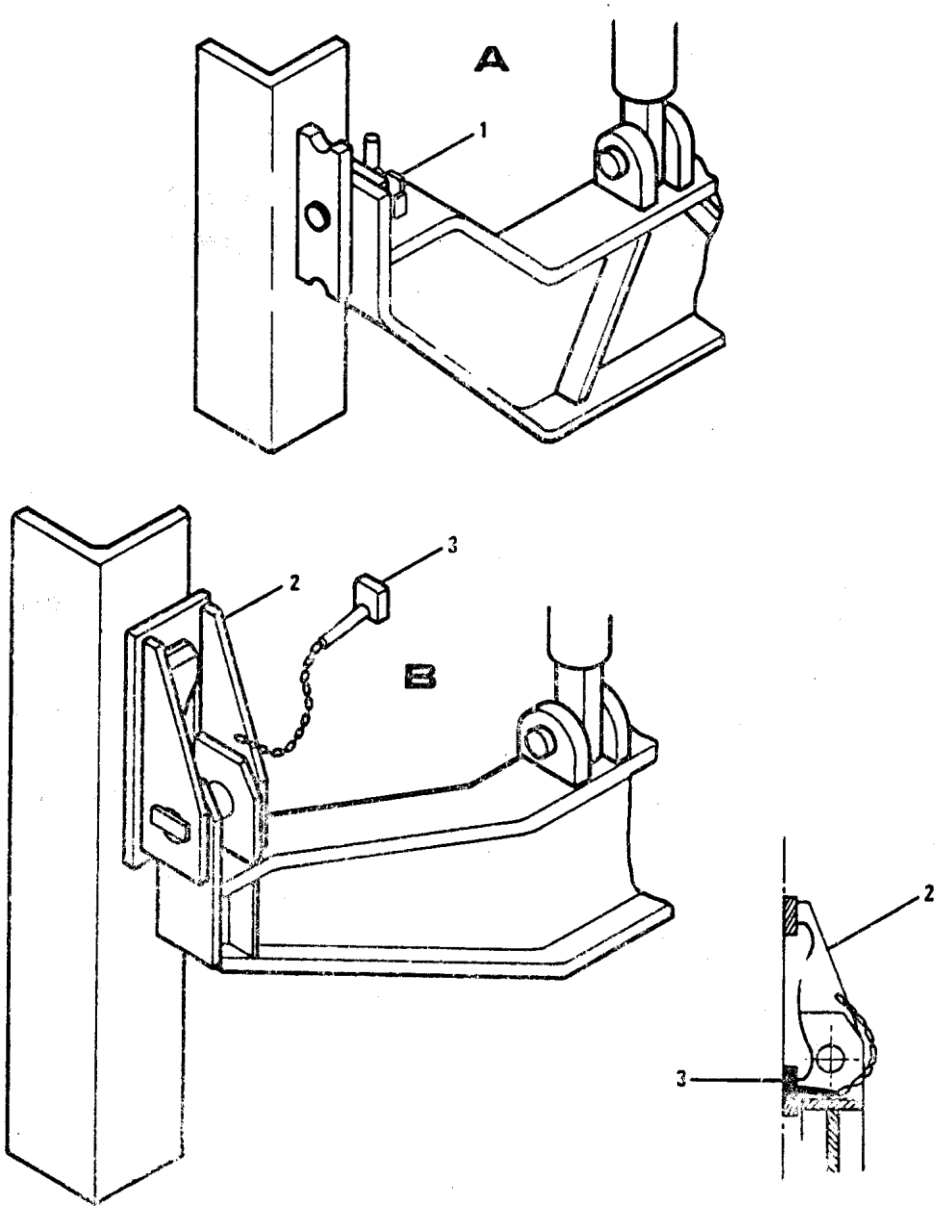
A
1
B
2
3
2
3

3.10.1.2.3.3 FITTING THE MONORAILS

This operation is required if the monorails could not have been fitted when mounting the tower head.

Fitting the monorails is carried Out using the telescoping hook，

opening on the jib foot side.

Before fitting the monorails， on the tower head， jib foot side， pin 4 monorail support plates(1)at a(φ25×150 shaft)and equip them with shafts b(φ25×150)and c(φ20×130).

With the hook. pick up the first monorail by round(2)，raise it up to its working position and as soon as possible pin—ponnect it by means of shaft b，see detail A. Lower the pulley block，the monorail pivots alongside the mast.

Then hook it up using round(3)and raise it in horizontal position as shown in detail B. Unpin shaft c(φ20×130)， trolley—in so as to introduce the monorail in working position and pin it 8t d(φ25×105 shaft). and e(φ25×50 shaft)see detail C.

Store support plates(1)of the first monorail in horizontal position and reinsert shafts b and c.

Proceed in the same way for fitting the second monorail.

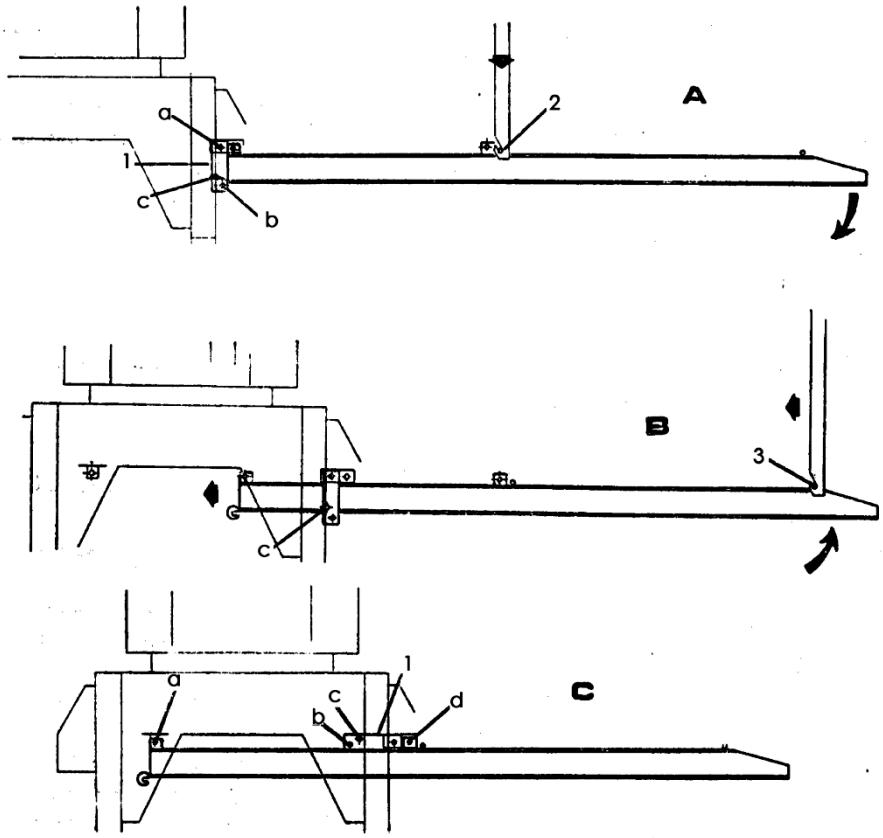

3.10.1.2.3.4 FITTING THE MAST LIFTING YOKE

The mast lifting yoke(1)is fitted on the upper mast members(2). Block the fixing brackets(3)by means of four bolts(4)and four washers.

a-When erecting, on the ground, on the masts previously assembled.

b-When dismantling, in the mast tower, on the current mast section to be dismantled.

ATTENTION. For case a—Make sure that the masts are hooked on the telescoping hook in the right direction: the position of the telescoping lugs on the mast determines the direction in which the mast section is introduced in the mast tower(the opening of the telescoping book must always face the mast tower).

Raise the assembly using the telescoping hook and position the first mast section on the monorails

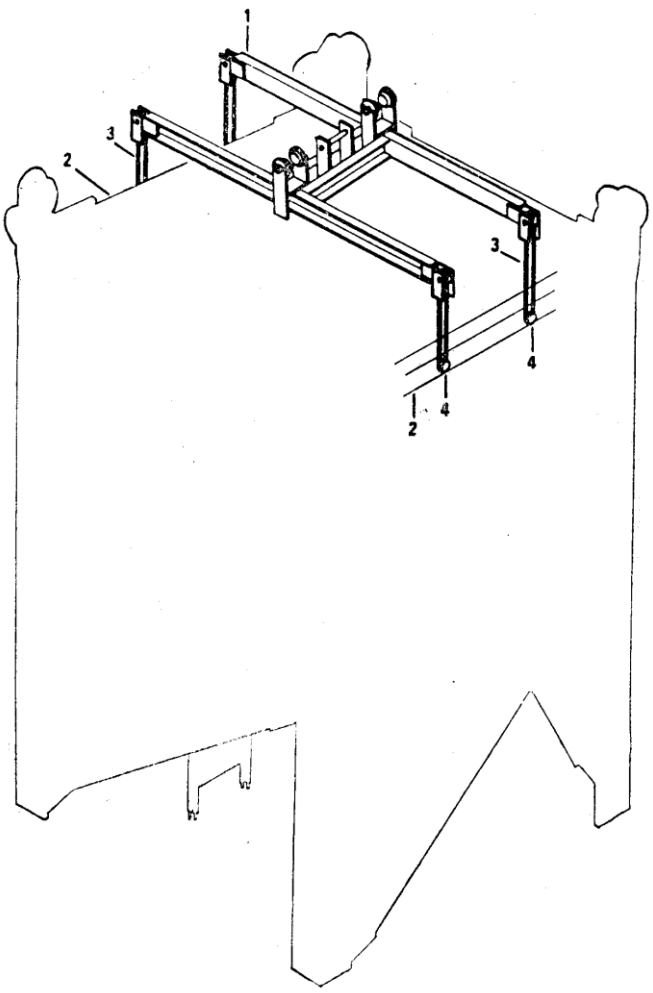

3.10.1.2.3.5 PUTTING THE HYDRAULIC GROUP AND THE RAM INTO SERVICE

HYDRAULIC GROUP
Packing--Filling up--Connections--Adjustments
HYDRAULIC RAM
Bleeding the hydraulic circuit—Adjustments

For all these conditions of use see the operating instructions(No．2)

3.10.2 BALANCING THE CRANE FOR TELESCOPING

3.10.2.1 SPECIAL INSTRUCTIONS

The crane is balanced in two stages：

Theoretically by suspending a load at a given radius.

practically by adjusting the position of the jib trolley，see page 4 153．We remind you that it is strictly forbidden．

to SLEW the jib，

to MOVE the jib trolley and

to HOIST (hoist up or down)

when the telescopic cage is lifted or being lifted．NOTE：For each crane type there are several pages giving the theoretical balancing position depending on

1) the mast type

2) the type of hoist winch．

So consult the page corresponding to the equipment of the crane concerned．CAUTION：It is necessary to use 8 bracket(1)on the telescoping hook(2)in order to suspend the balancing load．

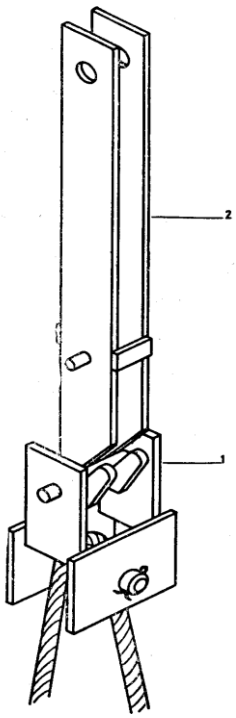

3.10.2.2 BALANCING THE CRANE

The crane can only be balanced after the tower head feet(1)have left the mast fishplates(2).

Operate the lever of the hydraulic group in the”hoist—up”direction and telescope until the feet of the tower head just leave the fishplates. Check that the crane is balanced and readjust，if required，by moving the jib trolley according to the various possibilities described in the manual”Use and fitting the jib trolleys.

The exact position is found by verifying the alignment of the tower head feet with the fishplates and checked by reading the minimum pressure required for telescoping on the pressure gauge of the hydraulic group.

This balancing position of the jib trolley can be marked on the jib by knotting a rag around a diagonal bracin9. But remember that this marked distance depends on the jib length. Consequently the mark should be removable

Chart for balancing		
Jib Length（m）	Working radius（m）	Counterweight（t）
50	14.9	1.8
45	14.75	2.4
40	14.2	3.2
35	13.4	4.2
30	12.45	5.4

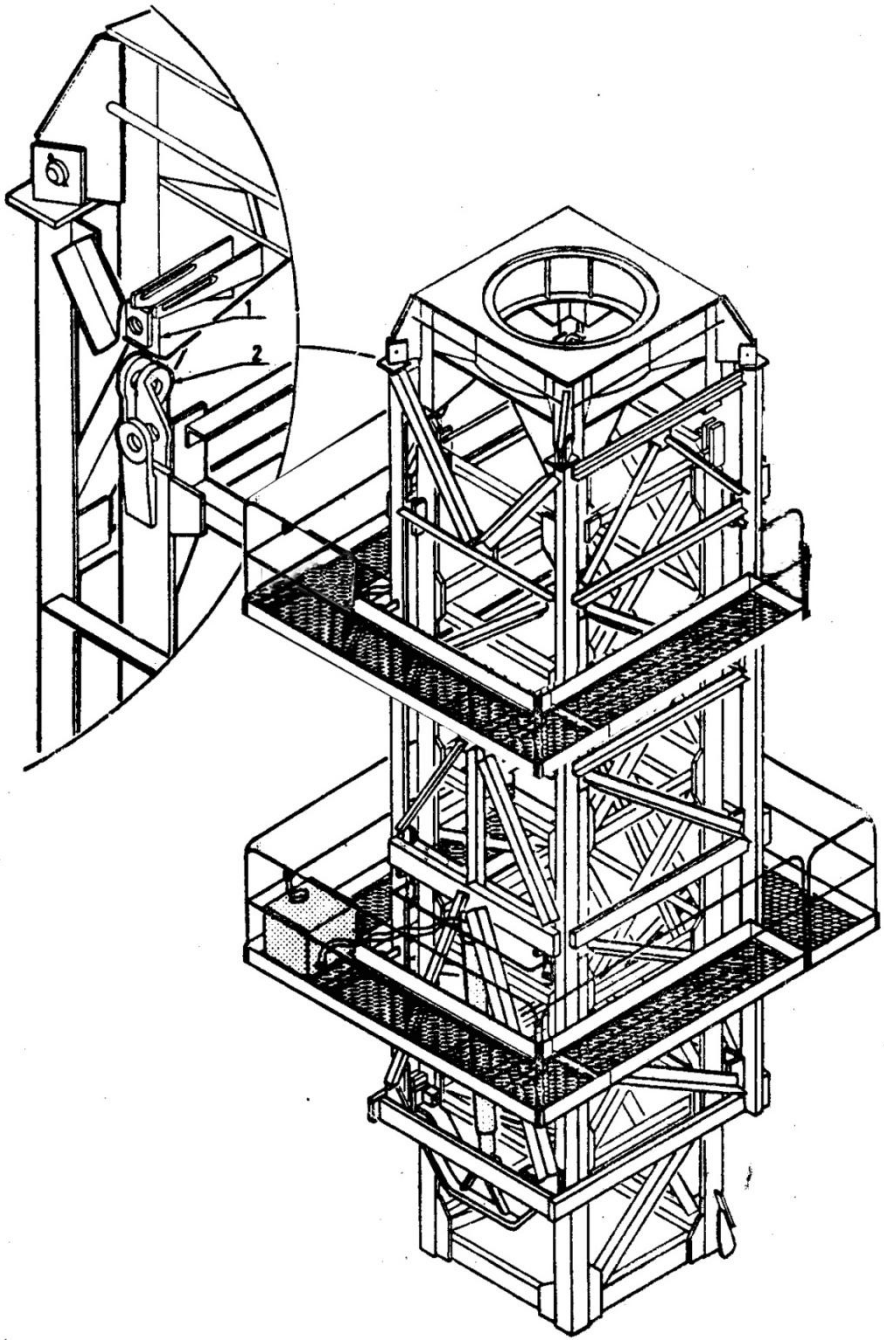
1
2

3.10.3 TELESCOPING

3.10.3.1 PRINCIPLE

The telescoping sequence comprises a series of operations which are repeated several times.

Lifting the crane part to be telescoped by extracting the ram which rests on the telescoping yoke(7).

Resting the lifted crane part oil the lugs(12)of the mast by means of the locking pawls of the telescoping cage(7).

Unpin in(9)and raise the telescoping yoke(7)by retracting the ram.

Connect the yoke(7)oil the next pair of lugs above.

Repeat this cycle 3 times so as to have the space required(6)for introducing the mast section into the telescopic cage.

The crane is now in the position as shown in Figure A.

The first ram stroke is 0. 80 m in this initial telescoping phase.

A

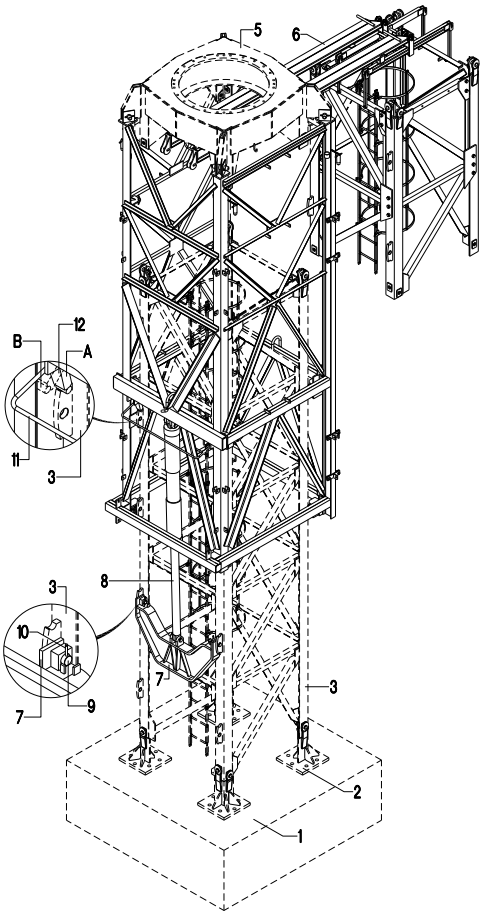

B

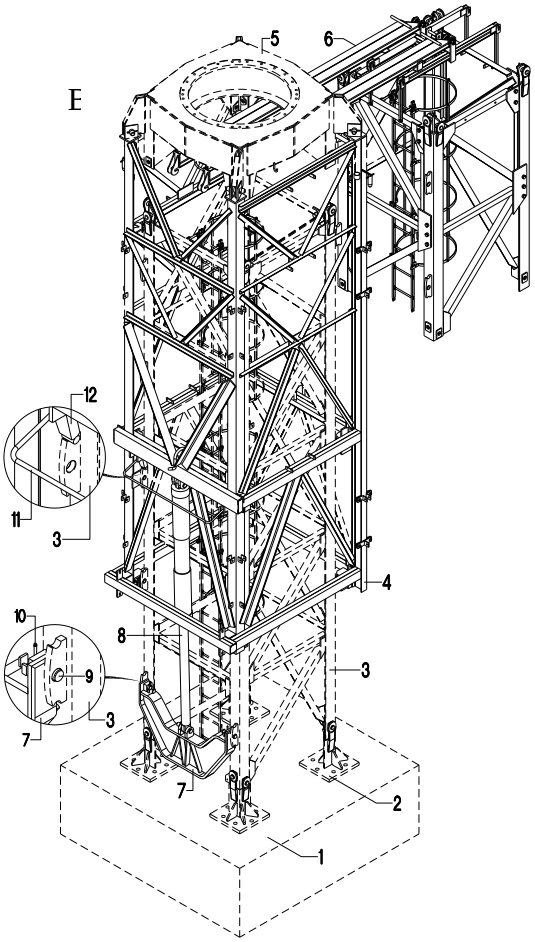

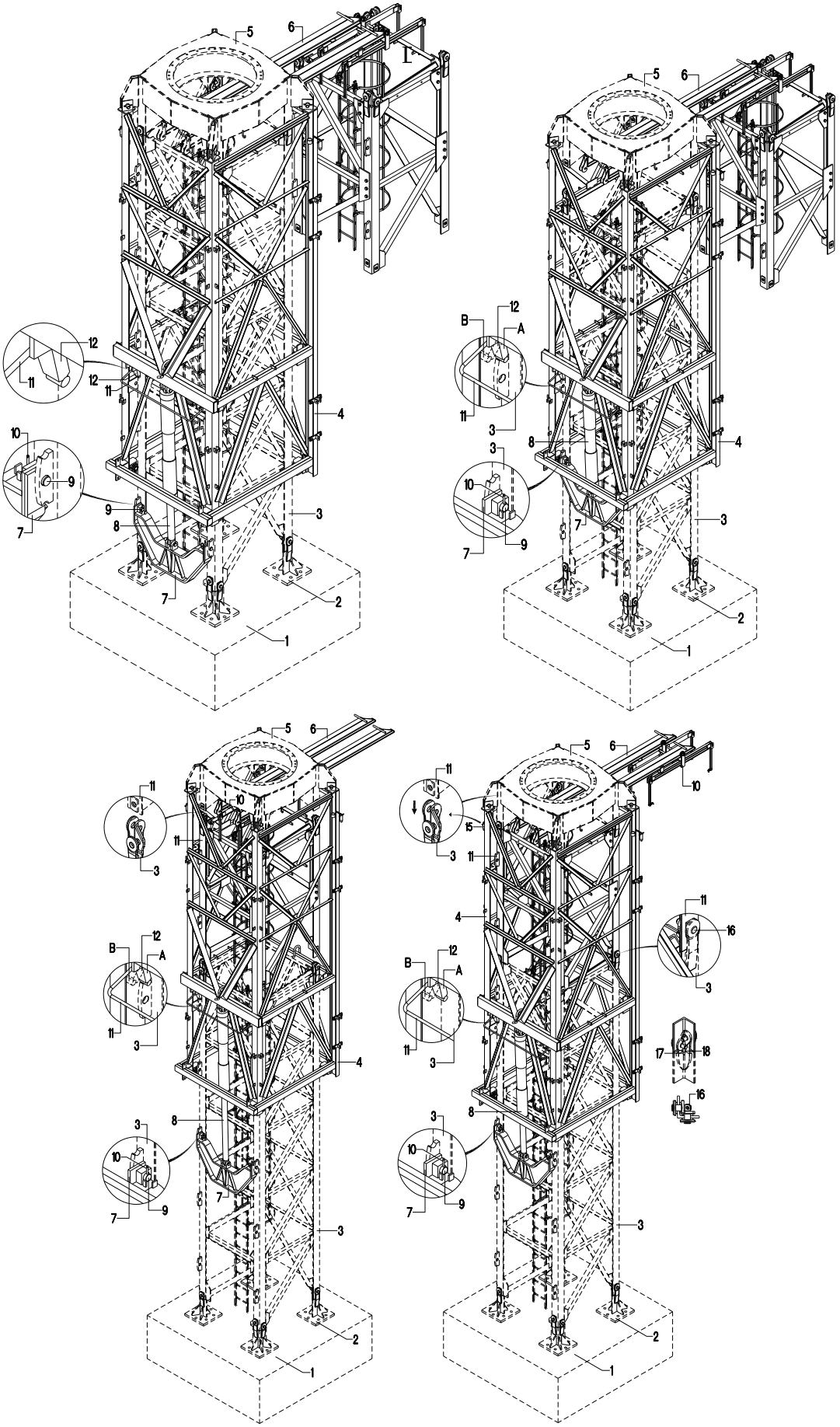
1
2
3
4
5
6
7
8
9
10
11
12
A
B
15
16
17
18

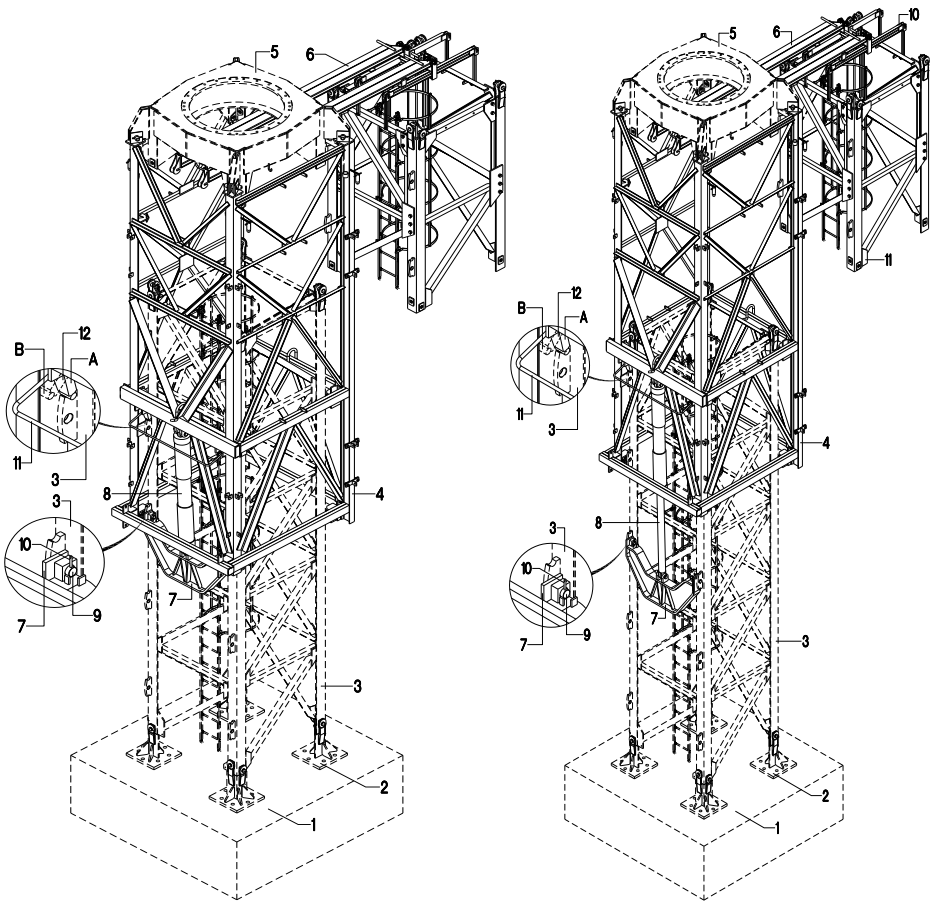

3.10.3.2 INTRODUCING THE MAST SECTION

The lifted crane part is resting on the upper lugs of the last mast section by means of the locking pawls(12)of the cage．The ram is almost entirely extracted and the total stroke is provided in such a way that the upper guide rollers of the telescopic cage cannot go beyond the fixed part of the mast tower．

Slide the mast toward to the tower and introduce it into the cage。

see Figure A．

Operate the hydraulic　group lever in I he《hoist—up》direction so as to release the pawls(12)from the lugs．Hold latter away from the using the control rod．

Operate the hydraulic group lever in the《hoist-down》direction and make sure e that the mast section(11)engages correctly in the fishplates Connect tiffs mast section using 4X 2 shafts．Insert locking pins and split pin them，See detail B: raise the ladder which pivots in up to its upper fixing position and engage the tenons of the ladder uprights in the ladder of the lower mast section.

Disconnect the mast lifting yoke from the 4 attachment points on mast and slide it out of the cage

3.10.3.3 HANGING THE 2nd MAST SECTION FROM THE MONORAILS

To hang the mast section to be telescoped from the monorails， it is essential that the lifted crane part is solidly anchored to the fixed mast tower.

To do this，operate the lever of the hydraulic group in the《hoist—down》direction until the feet of the tower head(1)engage in the fishplates of the last mast telescoped.

Fit 4 safety pins instead of the shafts(2).

If required， lower the balancing load， hang the mast lifting yoke from the pulley block.

Suspend another mast section fitted with its ladder on the mast lifting yoke(3)and raise it up to the monorails(4).

If required， reposition the balancing load and balance the crane.

Disconnect at(2).

Another telescoping sequence can be started， Repeat it until the required height is obtained.

NOTE：Before fitting the last mast section equip it with the towerhead access platform.

THE LAST MAST SECTl0N MUST BE PIN CONNECTED T0 THE MAST TOWER AS WELL AS TO THE TOWERHEAD FEET

The telescoping cage of this crane is equipped with 4 shafts (10n each side). Their diameter has been reduced by 2 mm so as to ease their positioning.

These shafts, connected to the telescoping cage by means o~ a chain, are ONLY TO BE USED FOR TELESCOPING.

They en8ure the connection between the fixed tower head and the last telescoped mast section of each mast level.

They must be fitted on the sides of the telescoping cage ladders.

At the end of the telescoping operations and prior to removing the connection between the cage and the tower head and before lowering; clown the cage, it is essential to replace them by the normal mast connecting shafts.

IT IS STRICTLY FORBDDEN TO CARRY OUT ANY HOIST MOTION BEFORE PLACING THE NORMAL WORKING SHAFTS

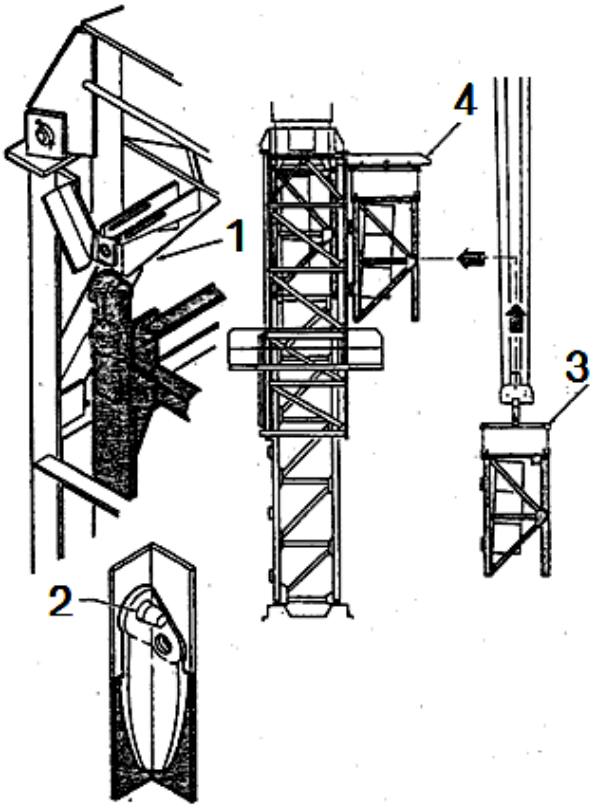
4
1
3
2

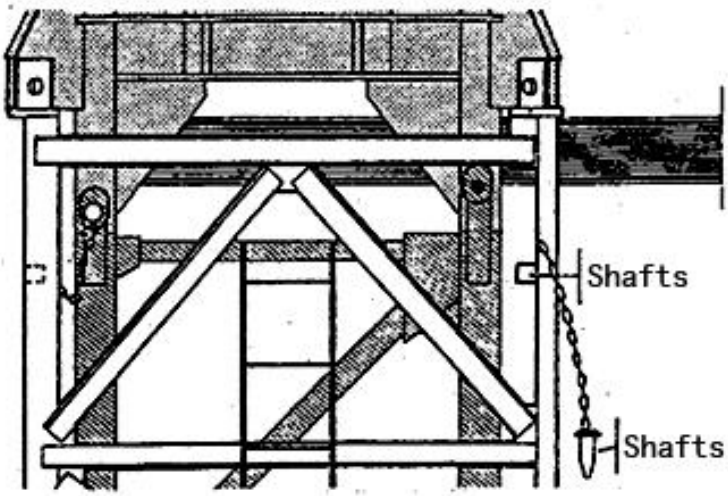
Shafts
Shafts

3.11 PREPARING BEFORE PUTTING INTO SERVICE

All the operations concerning the preparing before putting into service serve to ensure the crane work under correct driving and safety conditions.

On the whole，all these operations can be split up into three groups：Checking and carrying out the mounting operations in order to avoid any hindrance as regards the proper working order on the safety.

Adaptation of the crane equipment to the site requirements.

Adjusting the various safety devices.

In order to carry out the adjustments and the maintenance and to reach the control unit use the devices provided on the crane according to the way shown

3.11.1 CHECKS TO BE CARRIED OUT AFTER ERECTIION

The execution of the crane erection and the safety require a certain number of operations or checking to be carried out according to the following description.

CONCERNED		OPEATIONS TO BE CARRIED OUT
CRANE PARTS	Travell-in g crane	Check that there are no obstacles on the track which may hinder the crane travelling
		Check the fitting of the buffers and the limit switch ramps(according to the standards in force)
		Remove any wedges and anchorages
		Release the bogie rail clamps
		Make sure that the travelling mechanisms are electrically connected
	Static crane	Check that any anchoring means possibly used are correctly fitted
Chassis		Check the cable winder installation
		Check the supply cable length with regard to the middle point of the track
		Check the correct ballast attachment
		Cheek the fastenings for out Of service anchorage，if any
		Check that the electric cables run correctly under the chassis in order to avoid any damage
Access		Check the fixing of the ladders and back loops．replace defective parts，particularly the locking wedges when re-using
Mast		Check the good tightening of the mast se pinning bolts
		Check that the electric cables are correctly hooked on the able

	support rope(see detail 2)
	On the basic mast cheek the fitting of the ladder extension of the basic mast unit(fig．B1-B2)
Monorail	Fold down the monoail alongside the mast
Telescopic cage	Lower the telescopic cage
Access Towerhead	Fit the towerhead access ladder
Cabin	Check the locking of the cabin in working position (i.e. slid into his cat-head)
	Make sure that the driving instructions are affixed in the cabin
	Make sure that the access ladder to the cat-head is fitted

CONCERNED	OPEATIONS TO BE CARRIED OUT
Mast-head	Check the trolley platform attachment
	Check that the safety ropes are fitted onto the jib and the cat-head.
	Carry out the passage of the electric supply cable for crane use
	Check the fitting of the counter-jib cat-walks and grab rails
	Make sure that the hoist and trolley ropes are properly reeved
	Make sure that the winch derrick is dismantled and stored on the winch chassis using 2 clips (1) and l bracket (2)
	Check the counter-jib ballast fastening
	Check that there are no objects on the cat-walks which could fall down when moving the crane
Lubrication	Check the oil level and the greasing points according to the Operating Instructions

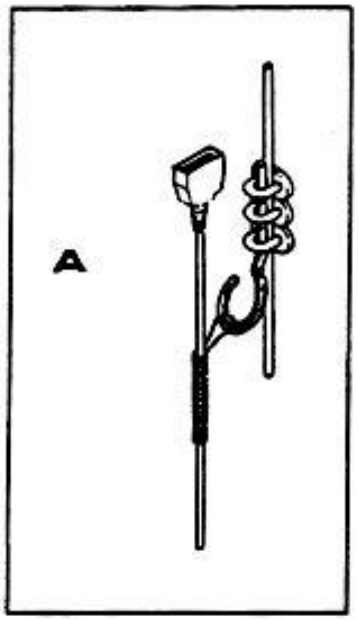
A

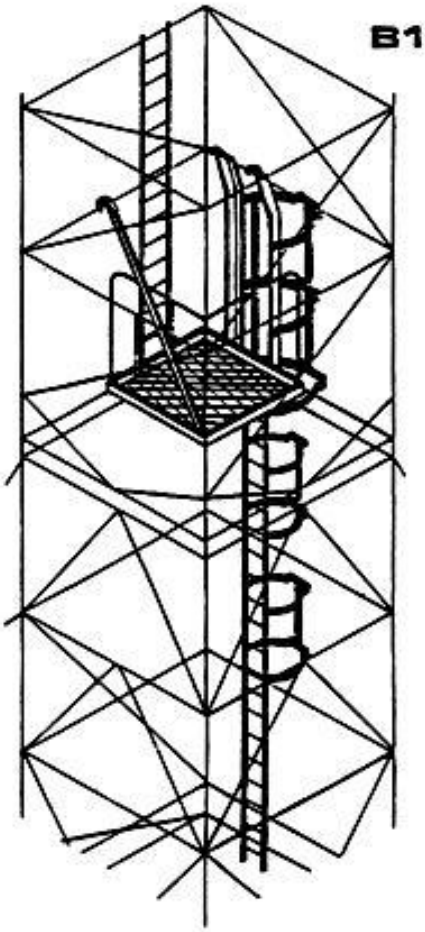
B1

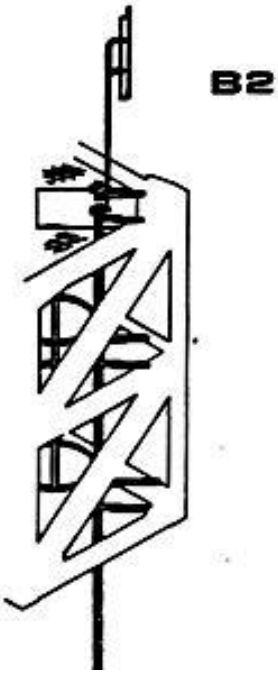
B2

3.11.2 FOLDING DOWN THE MONORAILS

As the monorails risk to hinder manoeuvring the jib trolleys at the minimum radius, we advice you to push them in under the tower-head.

Figure A: monorail pulled out for telescoping.

Figure B: monorail stored under the tower-head after telescoping.

Unpin shafts (1) and (2),the links(3) and (4) lower to position B. Repin shafts (1) and (2) at a and b; later on the monorail (5) will be supported by there shafts. Unpin shaft(6),lift up the monorail at its nose by means of the hoist yoke pin shaft (6) at c. Unpin shaft(7).The monorail (5) lowers until it is supported on shafts (1) and (2) of links (3) and (4).Pull the monorail backwards until it can be pinned at d.

Repeat the same operation for the other monorail.

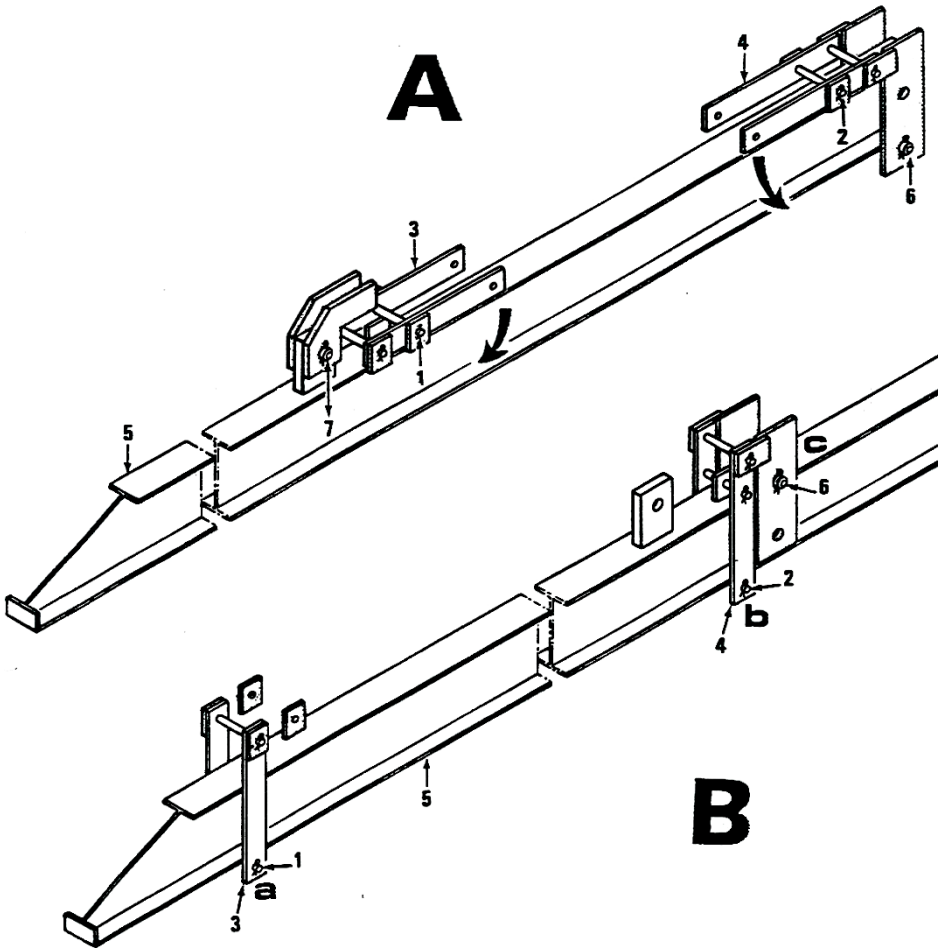

3.11.3 LOWERING THE TELESCOPIC CAGE

Using the crane，lower the telescoping yoke and the ram down to the ground．

Run a sling(1)around the rear telescopic cage beam on the level of the ram attachment(detail A)and hook it on the load hook．Choose a sling of sufficient length．

Tighten the sling but not too much．

Check that the mast sections are bolted together and connected to the towerhead．Remove shafts(2)connecting the telescopic cage with the towerhead(detail B)．

Release the safety catches．

In order to carry out the lowering operation in safety，the personnel does not remain on the cage，but works from inside the mast using the normal accesses．

Slacken the rope，the cage must lower by the action of its dead weight．

ATTENTION

During this operation counterbalance as much as possible the lateral forces due to the sling tension so as to prevent the telescopic cage from getting blocked on the mast．The weight of the hydraulic unit contributes to this balance．

Release the safety catches at each passage of the lugs and continue lowering the telescopic cage until it reaches the lowest position on the basic mast without，however，obstructing the mast access．Rest the telescopic cage on a set of lugs．

Lower down the hydraulic unit and store it away with the l：am and the telescoping yoke

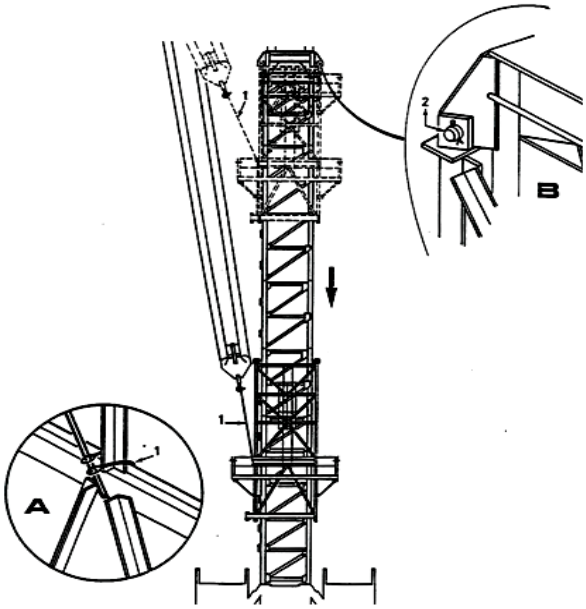
1
2
1
B
1
1
A

3.11.4 FITTING THE ELECTRIC SUPPLY CABLE

During telescoping the supply cable was suspended according to Figure 1． After fitting of the last mast section， fit the supply cable as shown in figure 2．

Dismantle trap door(1)of the access platform slacken the electric cable by sliding it in the cable pulling grip(2)and introduce the sling thus formed into the access platform openin9；Bolt trap door(1)，see detail A．

Using a clamp(3)fix the cable in the middle of the turning ladder．

In all cases， use cable pulling grips in order to prevent the supply cable from getting damaged．The fixing points of these cable pulling grips are located on the one hand under the fixed towerhead， and under the slewing towerhead platform on the other．

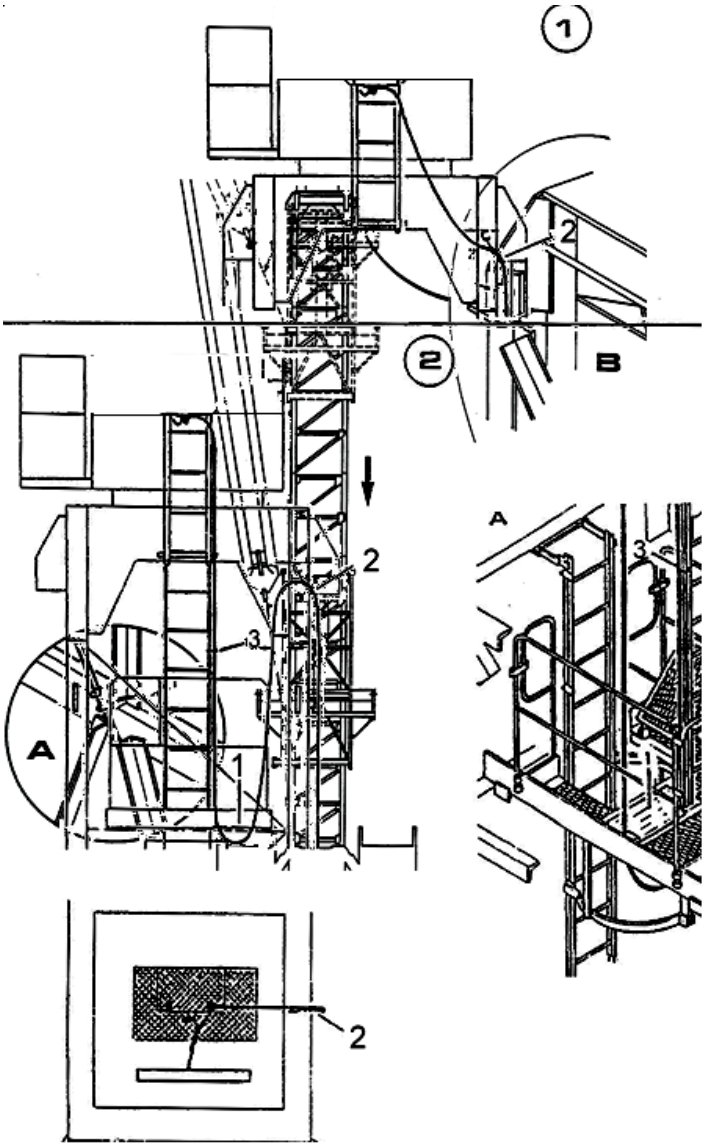

3.11.5 SAFETY DEVICE

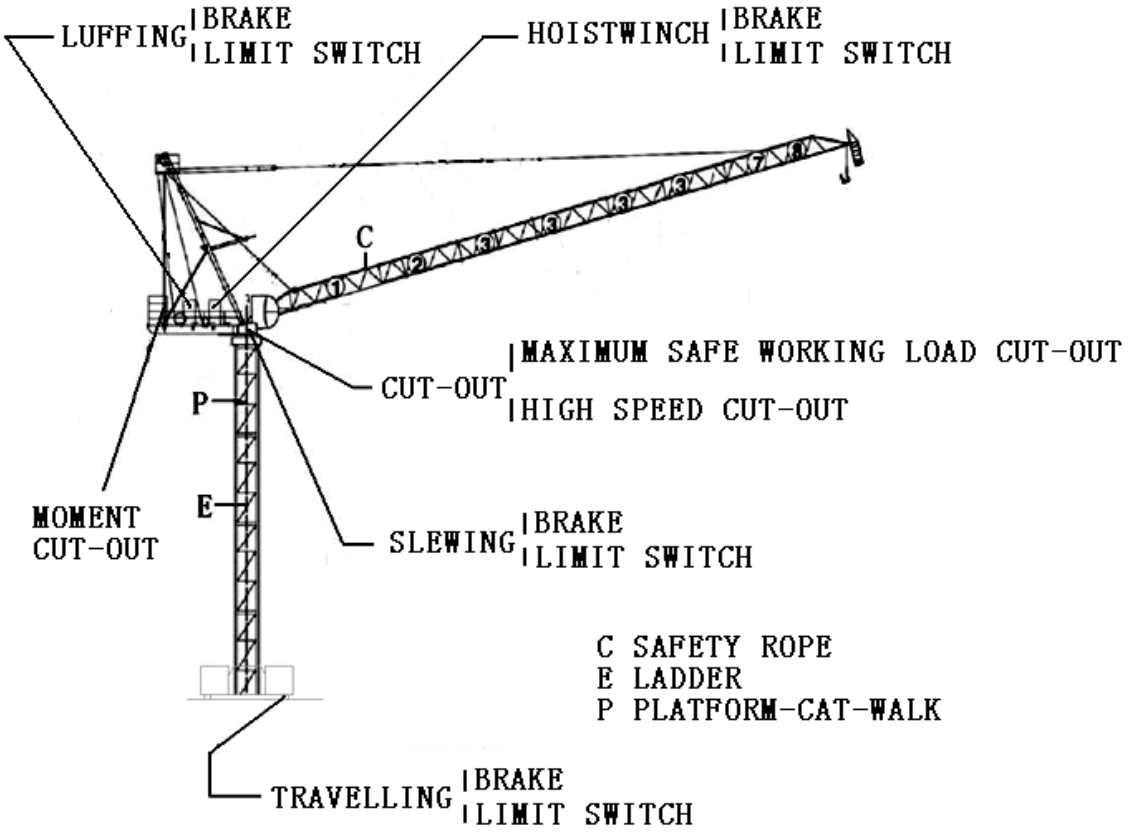

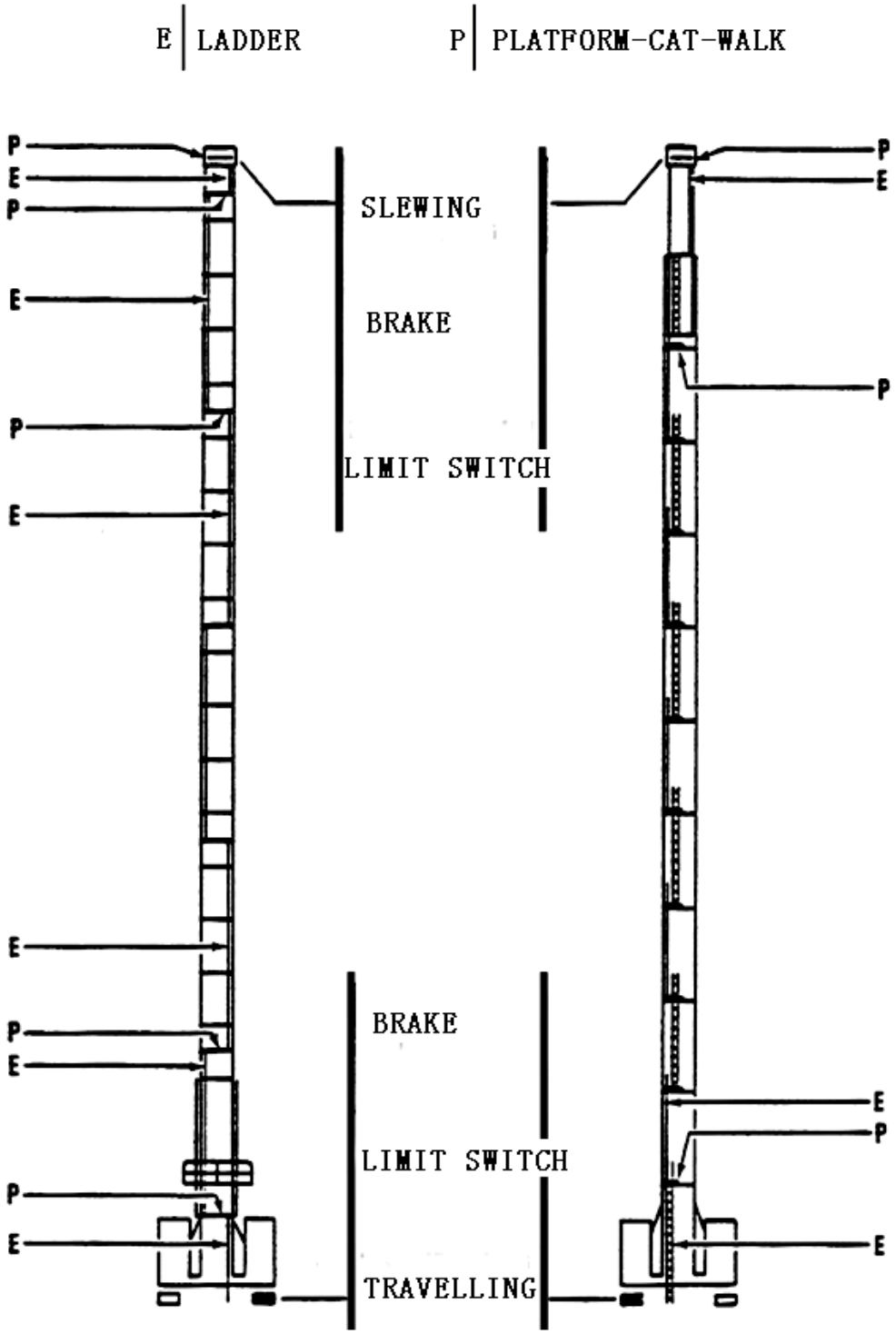
E LADDER
P PLATFORM-CAT-WALK
SLEWING
BRAKE
LIMIT SWITCH
BRAKE
LIMIT SWITCH
TRAVELLING

Safety devices of this luffing crane feature overload protection, accident prevention, travel limit and emergency protection. However, being incorrectly installed or adjusted, these devices may not only malfunction but also increase the risk of hazards. Make sure the instruction and requirement stipulated in this manual are strictly observed and followed.

When typhoon warning, unclench the weather cock, Luffing jib must be set in 60° ~ 65° .

3.11.5.1 Load moment limiter

Installed on the A frame, the limiter will be extended by the pull force imposed on it in proportion to the varying load moment. The distance between the 2 steel bars welded on the limiter will change and activate the load moment limiter and adjustable contact mounted on the bars to realize the limit function. Note K1 and K2, K5 for torque limiter contacts.

Attention please：When the crane load for MSWL 90%, contact K1 cut off, hoisting mechanism may not lifting and decline rate; Only 1-4 speed fluctuation, Arm no 3 speed prone function, which only reached 1-2 speed. fluctuation

When the crane load for MSWL 105% and contacts K2 cut off, lifting mechanism not only rise function decline function (1-4 speed), Arm, only agencies cannot lift (1-2 speed).

When the crane load for 110% MSWL, K5 contacts, lifting mechanism not only rise function decline function (1-4 speed), Arm agencies cannot decline, lift, namely stop action.

MSWL for the Max Safety Working Load .

3.11.5.2 Load limiter(most ascendant)

Load limiter is installed inside the jib and its function is to limit the Max Safety Working Load MSWL and make sure that objects of different weights are lifted at corresponding allowable speed.

Open the load limiter, there are 4 pairs of switches and contact, 2 of which are usually used, respectively named LCHGV and SLCHPV, the other 2 as back up for the purpose of alerting and over-speed restriction.

When the crane load for 60% MSWL, contacts SLCHGV cut off, hoisting mechanism and function may not quickly.

When the crane load for 110% MSWL, contacts SLCHPV cut off without lifting mechanism, function, only to decrease (1-4 speed), arm, only agencies cannot lift.

Either the load moment limiter or the load limiter, after adjustment up to the standard, needs to be locked in the contact to avoid the influence of the oscillation.

Never adjust the limiter or change their configuration at will or otherwise it will cause severe accidents.

Digital safety device can be used on this luffing crane.

3.11.5.3 Travel limiter

（1）Hoist height limiter

The limiter works by rotation limiter mounted on the hoist drum restraining the rounds of rotation to prevent over winding or under winding, to prevent the hook from hitting the ground and lead to lessening of wire rope and arrangement disorder of wire rope on the drum.

Refer to hoist winch user’s guide for adjustment method.

（2） Lifting limit:

Lifting:

When contacts RLH cut off, lifting mechanism not rise high.

When contacts SLH cut off, lifting mechanism cannot rise.

Drop:

When contacts RLD cut off, hoisting mechanism, not only low speed.

When contacts SLD cut off, lifting mechanism cannot decline.

When the luffing arm rise to 65°， cut off power supply of slewing motor , just leaving only one slewing motor for work.

（3） Slewing limiter

Mounted on the slewing ring. The toothed ring drives the input pinion on the rotation limiter to keep the slewing under 3 rounds and protect the cable from distortion and breakage.

Adjustment: remove the cover, touch the contact when the jib slews to identify the contact position where the jib is directed left and right. Slew the jib by 1.5 rounds rightward and rotate the rightward cam to halt the slewing motion by pressing the contact against the limit switch. Slew the jib leftward by 3 rounds and rotate the leftward cam to halt the left slewing motion by pressing the contact against the corresponding limit switch.

Repeat the procedure by 3 times before setting completes.

The slewing limiter will stop function when the tower crane is out of service. Release the slewing brake and put the crane into manual brake condition, the tower crane will not slew by more than 3 rounds inspire of winds in any directions. Manually restrain the free slewing of jib in out of service mode is strictly prohibited.

Additionally, user should pay attention to abnormality of counter jib motion in face of wind due to excessive number of boards or banners hung on the counter jib.

（4） Radius limiter and anti-retroversion device

2 radius limiter are installed on this luffing crane.

①The radius limiter installed on the trolley drum will limit the jib movement within 150-850. This limiter shares the same working principle and adjustment method with any ordinary corner limiters. Identify the stop and decelerate contact and the relevant direction before proceed with the adjustment.

Drop:

When the plane dropped to arm 19 °, contacts RVH, no arm hoisting speed.

When the arm frame has 15 °, Yang SVH contacts, arm agencies cannot lift.

Up:

When the arm frame lift 81 degrees, contacts, arm RVD cut off is no speed.

When the arm rack up 85 °,SVD contacts, arm agencies cannot decline.

②Radius limiter installed on the slewing upper part only limits the jib’s max elevation angle to be less than 850 and the jib’s min elevation angle to be less than 140.

When the arm has 86 °plane supine, arm up to limit, contacts SVHO cut off.

When the plane dropped to 14 °arm for moving arm dropped off limits, SVDO contacts.

Anti-retroversion device not only limits the maximum elevation angle but also serve very good buffering as for preventing the oscillation of jib rebounds. Check after installation its reliability of the contact point with the jib section.

（4） Wire rope anti-escaping device

It is inevitable that the hoist wire rope be loosened and escape from pulley during hoist movement. The wire rope will be wear and break when tightened again. Therefore, there is anti-escaping device on every pulley which functions in the way that the block rod and outer diameter of pulley retain maximum clearance of 20% of the wire rope diameter. Make sure the clearance is within this limit.

（5） anti-escaping pallet on hook

Make sure that the wire rope comes into the hook inlet smoothly. Never move the pallet and the wire rope will never escape from the hook.

（6） Obstacle indication lamp

At night or during cloudy or misty weather, install obstacle lamp to avoid tower crane crash with flying objects,

Solar-powered lamp and regular checking are recommended

（7） Anemoscope

Install the right anemoscope in accordance with instruction when height under hook reaches 50m

NOTICE：

After the debugging of fix the crane has been finished，it should write down the distance between each limit switch of the weight limited and the adjusting bolt of the moment limiter

After the crane is put into service，it should adopt the load which is debugged for half month(no more than a month)and check the weight limiter or the moment limiter to keep it in good work situation，When

checking or verifying it，it should check each limit switch of the weight limiter and the moment limiter, wither being fed or being cut—off．It should check whether there are some changes about between each limit switch of the weight limiter or the moment limiter and the distance of the adjusting bolt，and write down the records.

4 .DISMANTLING BY MEANS OF THE MOBILE CRANE

4.1 REQUIREMENTS FOR DISMANTLING

A) Establish an area inside the job site in which all the crane components shall be stored.It is advisable to keep all the parts off the ground.

B) Verify that the crane is still structurally sound to carry out the disassembly in a safe manner.

C) Ensure that there are no electric cables, overhead or ground systems which could interfere with the disassembly maneuvers.

D) The person responsible for the job site shall check that there are no people within the crane disassembly area.Put barriers where feasible.

E) Check that the hoisting devices supplied by the Customer meet the job specific criteria.

The mobile crane used for moving, assembling and disassembling the different crane components shall hoist at least 8000 kg (17,640 lb.) for assembly of slewing unit equipped withcab, main electrical box (Q.E.G.) and counterjib complete of winches to a minimum height of14 m above the “H” height of the crane tower

Alternatively, the mobile crane should hoist at least 6500 kg for disassembly of the slewing unit without the main electrical box (Q.E.G.), platforms and drive units or for disassembly of the counterjib without platforms, with both the hoisting and luffing winches in place but without the respective motors and reduction gears.

The appropriate crane truck shall be chosen, anyhow, by the competent person in charge of the erection according to the crane own configuration and to the recommended assembly procedure illustrated in the previous pages. For a correct choice Chapters of the crane operation manual shall also be taken in due consideration.

The erector shall inspect the conditions of the ropes, chains and slings which are to be used for hoisting the crane components.

The erector shall inform the mobile crane operator of the exact weight of the parts that are to be hoisted.

He is fully responsible for the slinging and hoisting of the loads.

F) During the slinging phases, before removing the pin connections of the various crane components,

verify that the center of gravity of the part to be lifted and the attaching point of the cable coincide.

4.2 DISMANTLING OF THE SLEWING UNIT

CAUTION

In this phase the erector shall have continuous visual contact with the mobile crane operator.

Refer to Chapter 1 “General Information”, para. 2.3 of the crane operation manual for instructions about verbal communications and hand signals.

These are absolutely necessary for a clear understanding and carrying out of the orders given by the erector to the operator of the mobile crane.

The erector should provide metal receptacles for the storage of pins and other small fittings; he should also care that pins and other small fittings are not permitted to drop.

Operating instructions for overhead dismantling of the slewing unit.

The dismantling procedure for the crane slewing upper part shall observe the same operating steps given for the assembly but in the reverse order.

Below find however the main dismantling phases.

⚠ WARNING

Remember to always disconnect the electrical connections of the various units prior to beginning with their disassembly.

A) Lower the hoist block to the ground operating the hoist winch;

B) remove the rotating socket from jib point and lower it to the ground using an auxiliary rope;

C) uncoil the hoisting rope from the hoist blocks and slowly coil it on the winch drum

D) Remove 2 counterweights-B (5000 kg) from the counterjib

E) Sling the jib in the indelibly-marked attachment points

F) uncoil the luffing rope so as the tie-bars lean on the special supports;

G) Secure tie-bar-A1 of the luffing rope mobile sheave block to the hoisting rope terminal; release the luffing rope mobile sheave block from the jib tie-bars reversing the order of the operations called

H) Move the luffing rope mobile sheave block near the counterjib A-frame head reversing the

order of the operations called for at

I) Connect the luffing rope mobile sheave block to counterjib A-frame head

J) Release the jib assembly tie-ropes and secure them to the counterjib A-frame and to the jib (remaining pieces) reversing the order of the operations called for at

K) Remove pins 100×330; remove then safety rope pins C20×55; lift and then lower the jib to the ground

L) Release the luffing rope socket from the socket lever on the A-frame head and coil again the rope slowly on the luffing winch drum;

M) Sling, lift and then lower counterweight-A (5000 kg) to the ground

N) Sling the counterjib A-frame and remove the pins connecting it to the counterjib and to the upper slewing ring support

O) Lift and lower the counterjib A-frame to the ground as recommended at

P) Sling the counterjib in the special attachment points provided reversing the order

of the operations called for at

Q) should a 8 t mobile crane not be available for dismantling the counterjib unit completeof winches, one can dismantle the following units separately:motors+reduction gears, rightplatform and left platform;

R) Lift the counterjib and lower it to the ground;

S) Sling the slewing unit in the special attachment points provided remove the pins

connecting it to the tower see of the crane operationmanual) and lower it to the ground;

T) Should a 8 t mobile crane not be available for dismantling the complete slewing

unit,one can dismantle the following units separately: cab support frame and electrical box(QEG), right platform and geared motors.

4.3 GROUND DISASSEMBLY OF THE JIB

Disconnect the jib sections removing the longitudinal spar connecting pins.

4.4 DISMANTLING THE COUNTERJIB A-FRAME

Fold the counterjib A-frame reversing the order of the operations called for at

4.5 GROUND DISASSEMBLY OF THE COUNTERJIB

If not already done, remove the platforms from the counterjib and store the single items.

4.6 SLEWING UPPER PART STORAGE

Properly grease all the mounting holes and pins.

Protect the unpainted parts (close to the bolt-connections).

Protect all the electrical parts (motors included) against bad weather conditions by covering them with rainproof sheets.

4.7 DISMANTLING THE BASIC MAST AND TELESCOPIC CAGE ASSEMBLY

DISMANTLING THE BASIC MAST AND TELESCOPIC CAGE ASSEMBLY，

4.8 DISMANTLING THE CHASSIS

The bogie rail clamps are clamped to the rails．

Uuballast the crane.

Remove the accesses and the cable winder，if any．

Dismantle the oblique legs and the struts．

Sling the basic mast unit using two 4 m slings fitted around the fishplate bolts． Unpin the basic mast unit from the side members and

lower it to the ground．

Unpin the side members from the cross beams and place them off the ground．

Sling the crossbeams release the bogie rail clamps and remove the cross beam／bogie assembly．Should the need arise one can disconnect the bogies from the crossbeams removing the shaft of the fork

5 .TOWER CRANEINNER-CLIMBING TYPE OPERATION

The outstanding characteristics of the inner-climbing tower crane are:

1. Hoisting height suitable for the construction of multi-story buildings with wire rope drum capacity being the only limitation to the lifting height.

2. More than double the effective coverage of same model of other type.

3. Smaller occupancy of working area which is especially suitable for metropolitan construction which has very narrow space.

4. Lighter weight than stationary tower crane of the same model that requires smaller amount of investment.

This instruction describes the performances, composition the inner climbing crane, the installation, commissioning of climbing system as well as the method, procedure and special notices of climbing, which should be regarded as supplementary to the service manual of stationary tower crane JTL140.

Special attention should be drawn to the difference and similarity between the inner-climbing type and other types of tower crane of the same model. The main differences merely lie in the parts below the slewing table, while the other parts above remain unchanged. Users of the tower crane are required to read the service manual of tower craneJTL140 thoroughly before operating the crane as this instruction specifically introduces the inner climbing tower crane and is supplementary to the service manual of stationary tower crane JTL140 Please consult Jarlway should there be any questions and we are ready to extend our assistance.